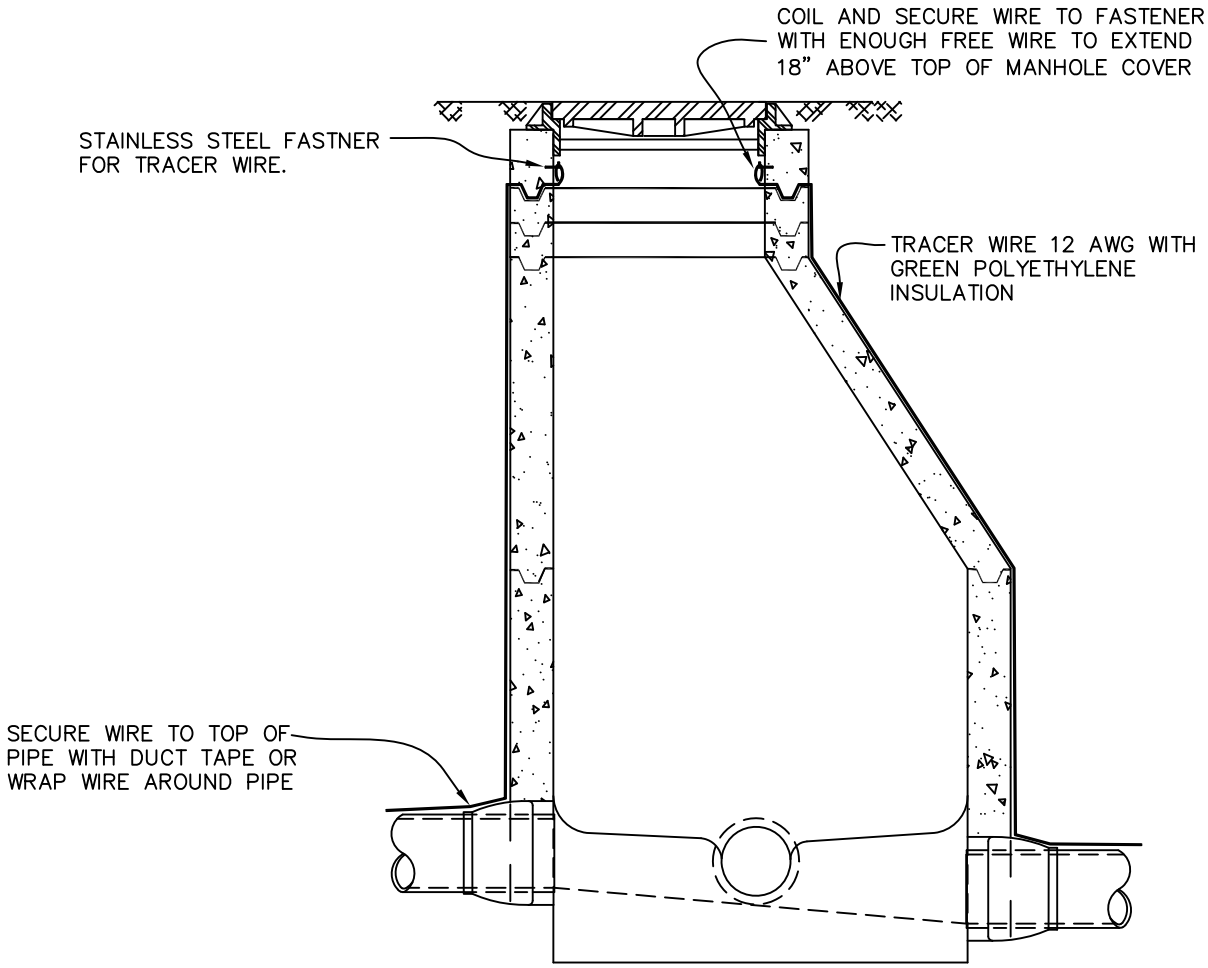

MANHOLE
(IF REQUIRED)

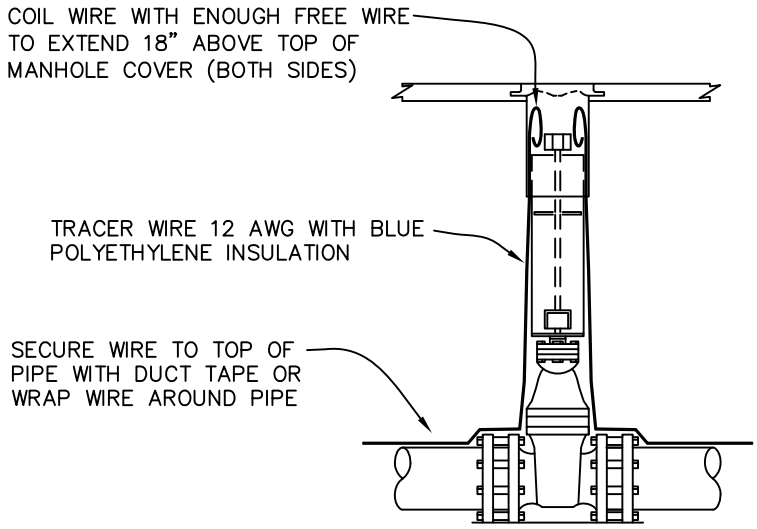

WATER VALVE BOX

CITY OF FLORENCE STANDARD DRAWING

TRACER WIRE

DATE:	DRAWING NO.
DEC–2011	F–321