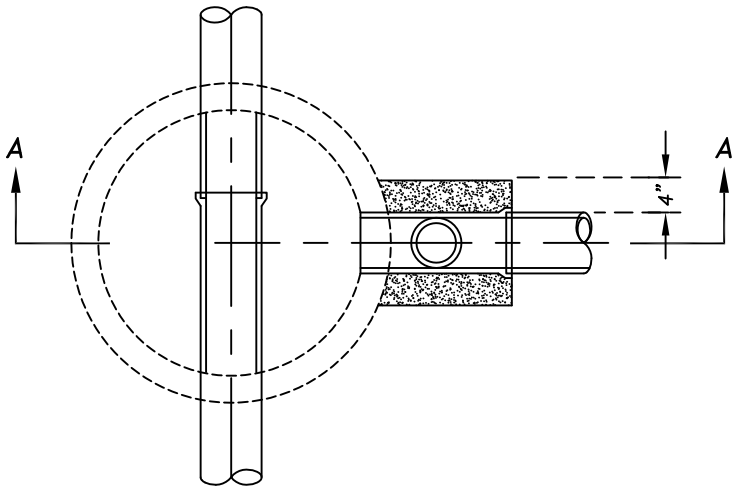

PLAN

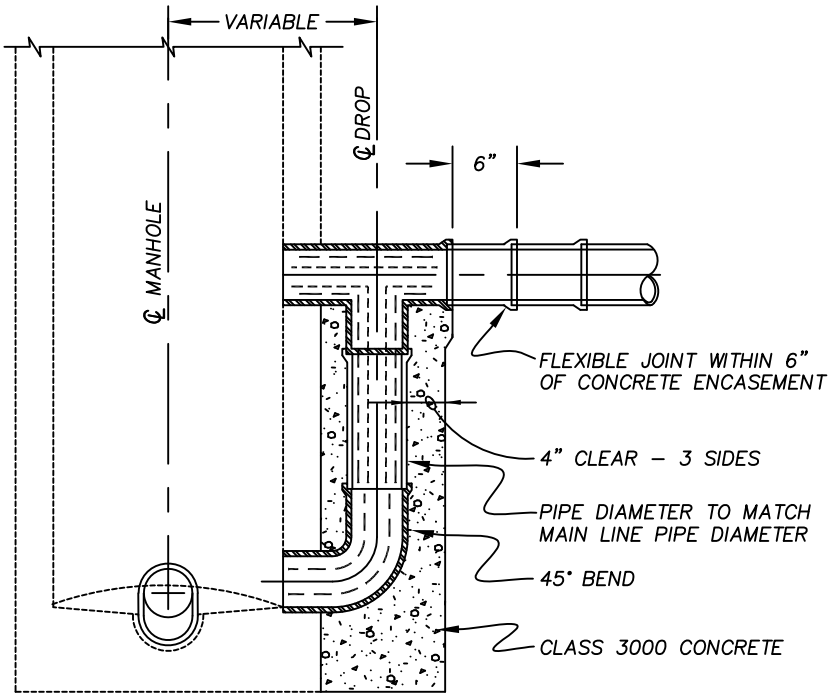

SECTION A–A

CITY OF FLORENCE STANDARD DRAWING

DETAIL FOR OUTSIDE DROP CONNECTION FOR MANHOLES

DATE:	DRAWING NO.
MARCH 2007	F–318

FILENAME: F–318.DWG