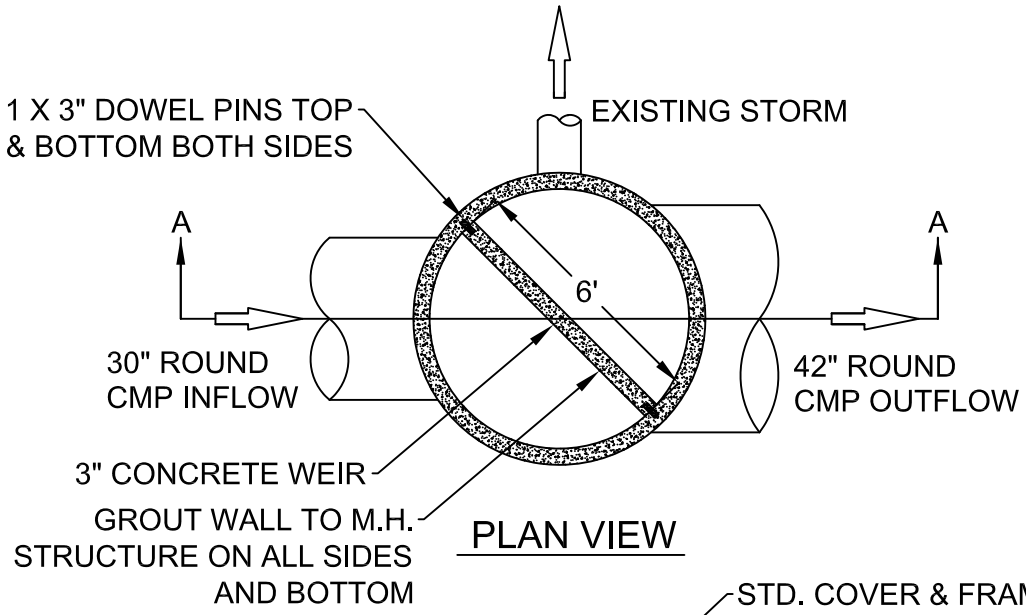

PLAN VIEW

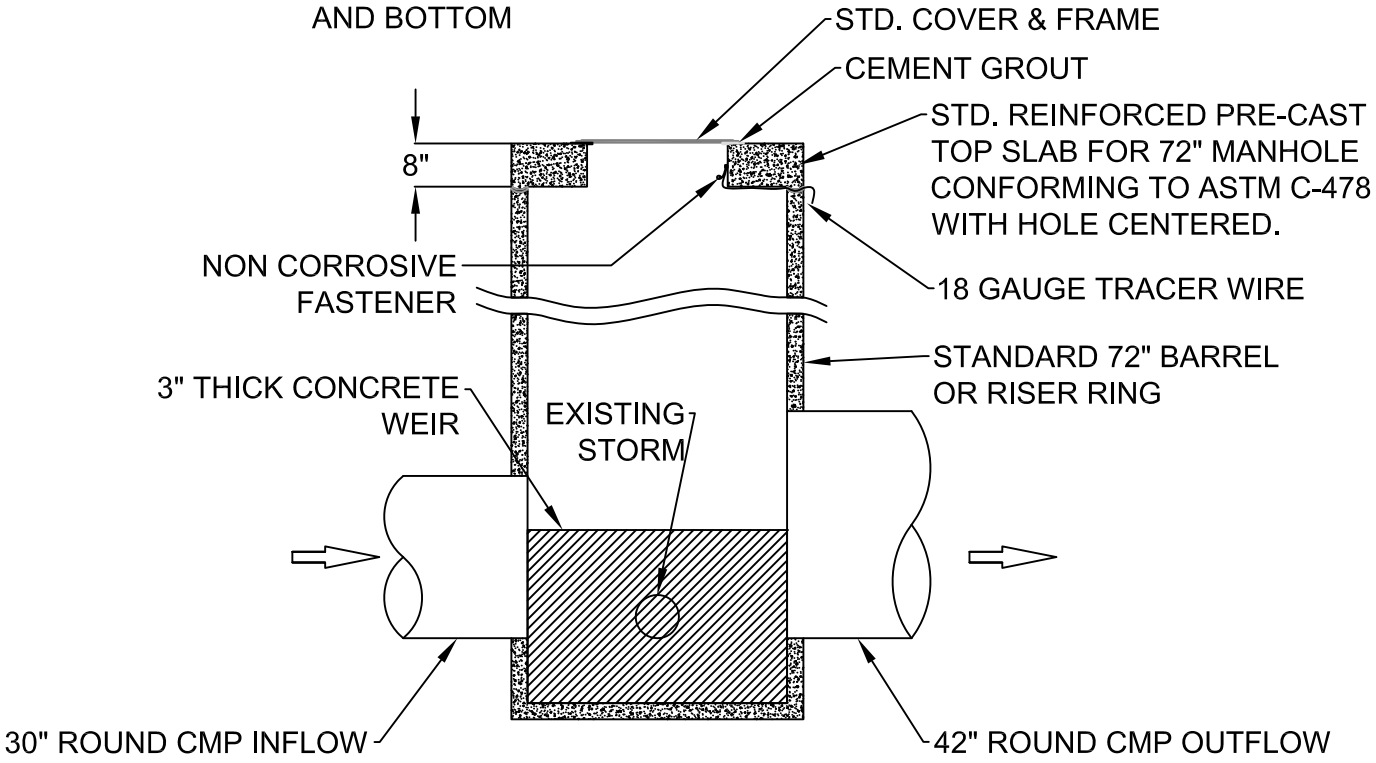

SECTION A - A

CITY OF FLORENCE
STANDARD DRAWING

FLOW SPLITTER MANHOLE

DATE:	DRAWING NO.
JULY–2012	F–108