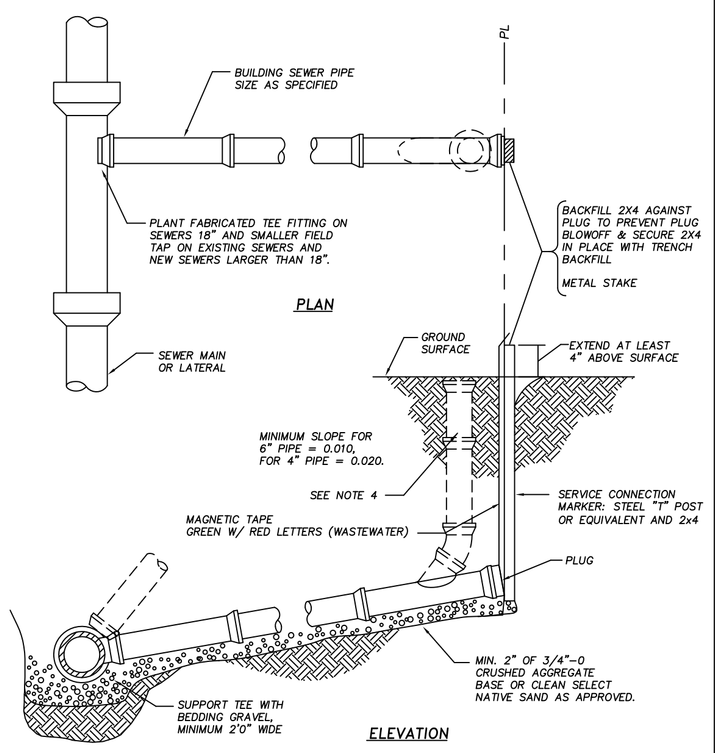

NOTES:

1. PIPE AND FITTINGS SHALL BE COMPATIBLE. ONLY MANUFACTURED FITTINGS SHALL BE USED.
2. MINIMUM DEPTH AT RIGHT OF WAY OR EASEMENT LINE SHALL BE 4 FEET.
3. MARKER POSTS AND BLOCKING SHALL BE TREATED WOOD. POST SHALL BE 2" x 4" FIR. POST TO EXTEND 4" MINIMUM ABOVE FINISH GRADE AND EXPOSED AREA SHALL BE PAINTED GREEN.
4. WHEN REQUIRED, A CLEANOUT SHALL BE INSTALLED.
5. LAY BUILDING SEWER AT MAX. 45° FROM HORIZONTAL TO ACHIEVE REQUIRED DEPTH AT PROPERTLY LINE WHEN MINIMUM SLOPE RESULTS IN EXCESSIVE DEPTH.

CITY OF FLORENCE STANDARD DRAWING

SEWER SERVICE DETAIL

DATE: DEC 2011 | DRAWING NO. F308

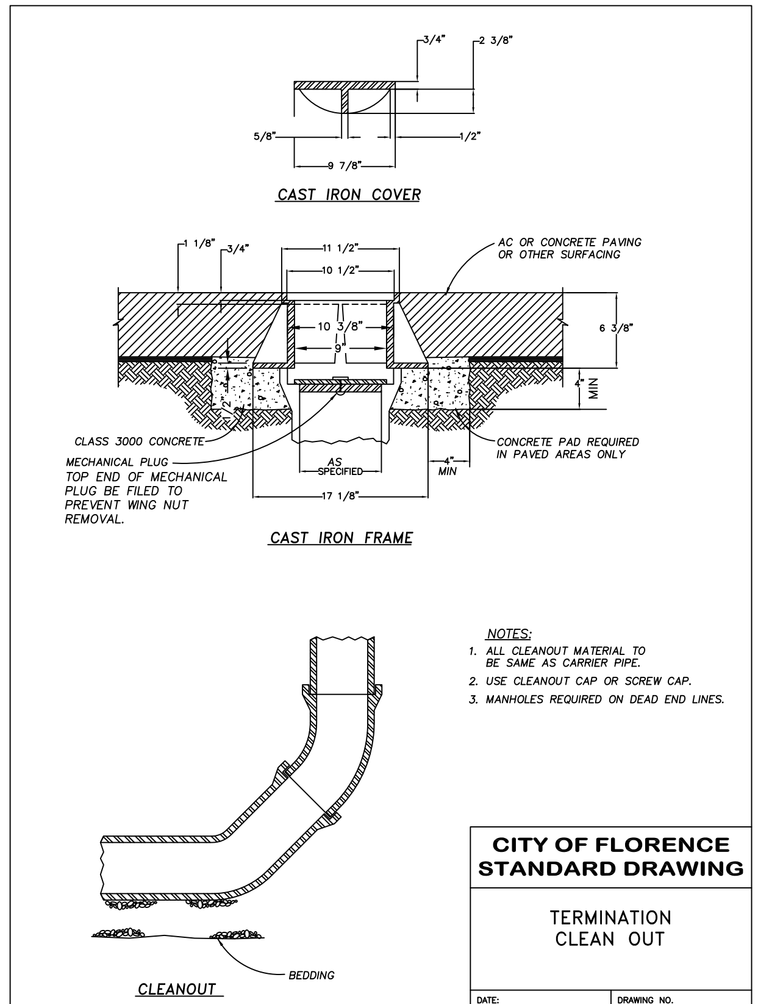

NOTES:

1. ALL CLEANOUT MATERIAL TO BE SAME AS CARRIER PIPE.
2. USE CLEANOUT CAP OR SCREW CAP.
3. MANHOLES REQUIRED ON DEAD END LINES.

CITY OF FLORENCE STANDARD DRAWING

TERMINATION CLEAN OUT

DATE: DEC 2011 | DRAWING NO. F310a

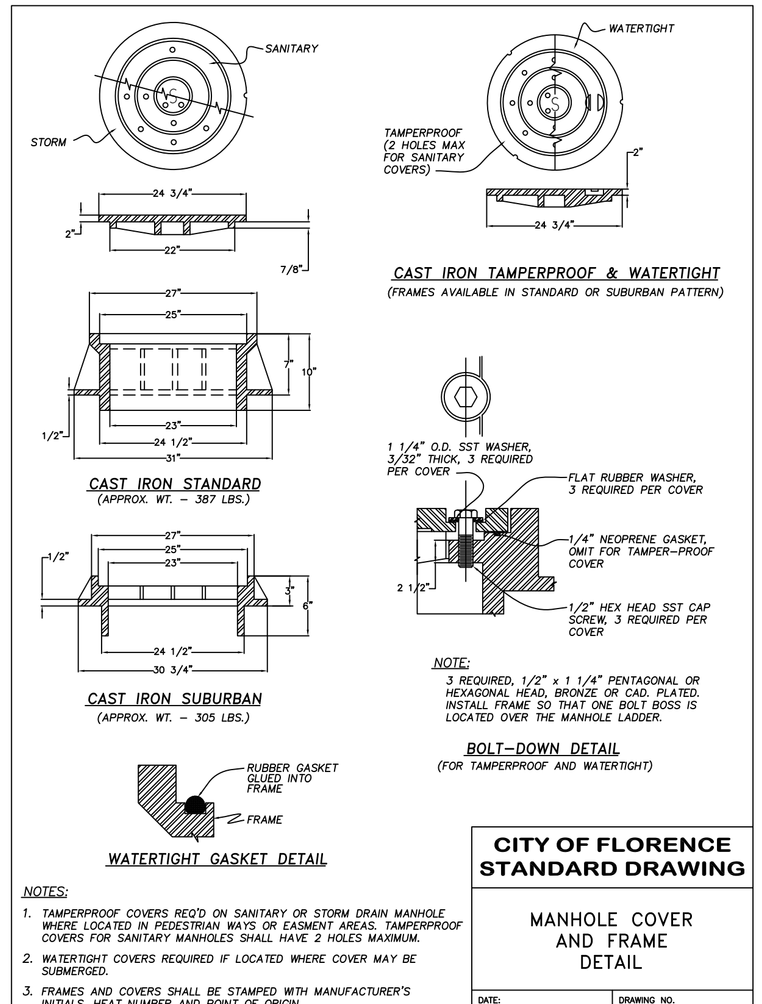

NOTES:

1. TAMPERPROOF COVERS REQ'D ON SANITARY OR STORM DRAIN MANHOLE WHERE LOCATED IN PEDESTRIAN WAYS OR EASMENT AREAS. TAMPERPROOF COVERS FOR SANITARY MANHOLES SHALL HAVE 2 HOLES MAXIMUM.
2. WATERTIGHT COVERS REQUIRED IF LOCATED WHERE COVER MAY BE SUBMERGED.
3. FRAMES AND COVERS SHALL BE STAMPED WITH MANUFACTURER'S INITIALS, HEAT NUMBER AND POINT OF ORIGIN.

NOTE:

3 REQUIRED. 1/2" x 1 1/4" PENTAGONAL OR HEXAGONAL HEAD, BRONZE OR CAD. PLATED. INSTALL FRAME SO THAT ONE BOLT BOSS IS LOCATED OVER THE MANHOLE LADDER.

CITY OF FLORENCE STANDARD DRAWING

MANHOLE COVER AND FRAME DETAIL

DATE: DEC 2011 | DRAWING NO. F313

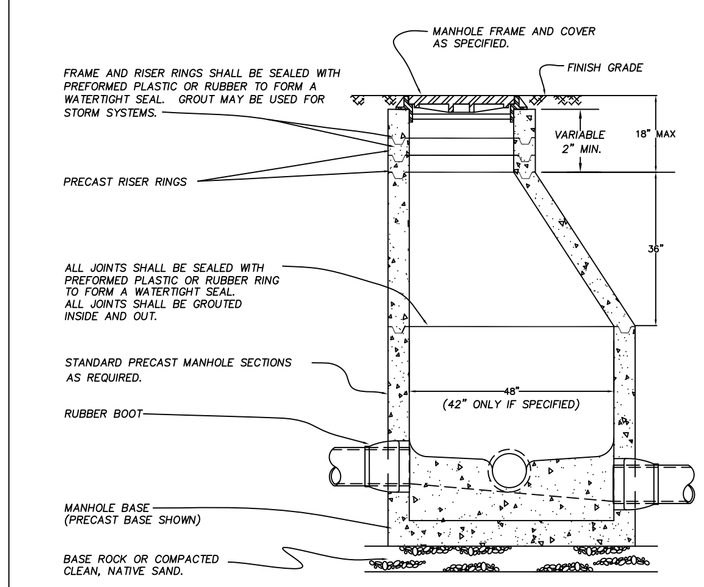

NOTES:

1. STANDARD PRECAST MANHOLE SECTION DIAMETER SHALL BE 48". USE 42" ONLY IF SPECIFIED BY THE ENGINEER.
2. ALL CONNECTING PIPES SHALL HAVE A FLEXIBLE JOINT WITHIN 18" OF MANHOLE WALL.
3. SEE MANHOLE BASE SECTION DRAWING FOR BASE DETAILS.
4. ALL MANHOLES SHALL BE VACUUMED TESTED.
5. MAX. 350' BETWEEN EACH MANHOLE (UNLESS OTHERWISE APPROVED).
6. SANITARY MANHOLES PLACED IN CENTER OF STREET.

CITY OF FLORENCE STANDARD DRAWING

MANHOLE

REVISION: 3-9-10 ELIMINATE MH STEPS

DATE: DEC 2011 | DRAWING NO. F-315

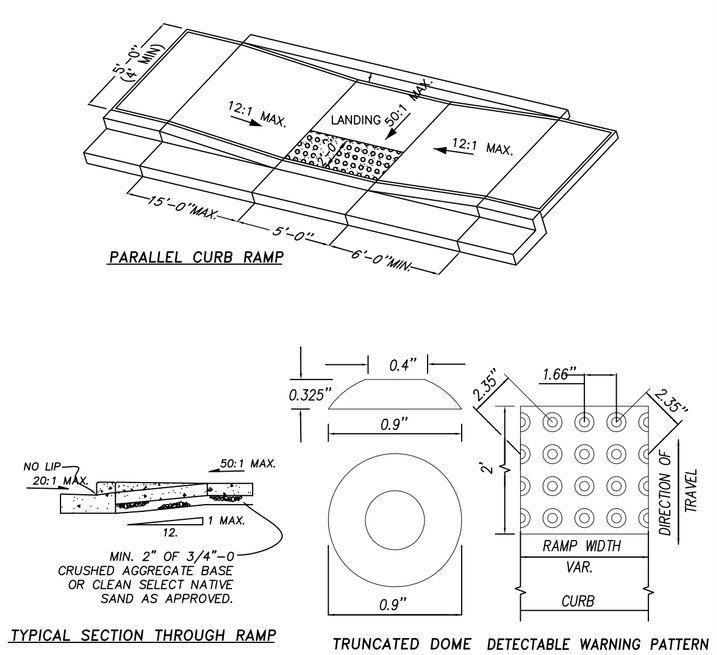

NOTES:

1. THE "AMERICANS WITH DISABILITIES ACT" (ADA) REQUIRES THAT ACCESS RAMPS TO SIDEWALKS CONFORM TO ALL FEDERAL GUIDELINES. EXCEPTIONS TO THE REQUIREMENTS IN THIS DRAWING MUST BE APPROVED BY THE ENGINEER AND MUST COMPLY WITH A.D.A.
2. NO ABOVE GROUND UTILITIES ARE PERMITTED WITHIN RAMP AREA.
3. LANDINGS SHALL BE PLACED AT THE TOPS OF RAMPS. LANDING SLOPE SHALL NOT EXCEED 50:1 IN ANY DIRECTION. THE SLOPE OF THE SURFACING AT THE BOTTOM OF THE RAMPS SHALL NOT EXCEED 20:1 FOR A DISTANCE OF 2' (SEE TYPICAL SECTION ABOVE).
4. MINIMUM LANDING DIMENSIONS SHALL BE 4' x 4'.
5. YELLOW PLASTIC TRUNCATED DOME DETECTABLE WARNING MAT AT CURB LINE.
6. CONCRETE STRENGTH SHALL BE 3300 PSI MIN.

CITY OF FLORENCE STANDARD DRAWING

PARALELL RAMP DETAIL

DATE: DEC 2011 | DRAWING NO. F206a

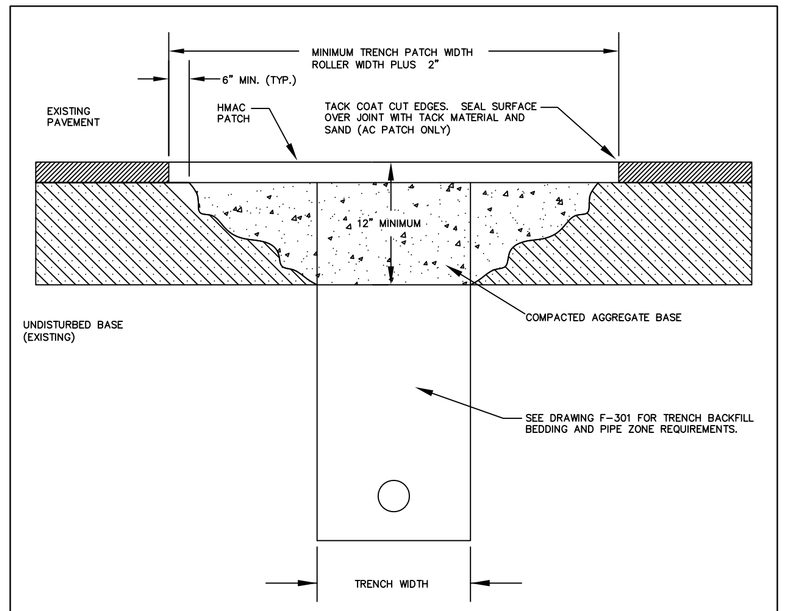

NOTES:

1. CONTRACTOR TO OBTAIN STREET CUT PERMIT FROM APPROPRIATE ROAD AUTHORITY PRIOR TO CONSTRUCTION.
2. COMPLETE REPAIR WITHIN 24 HOURS OF EXCAVATION OR PER THE SCHEDULE SPECIFIED ON THE PERMIT.
3. ADDITIONAL APPROVALS ARE REQUIRED FOR THE USE OF STEEL PLATES IN THE RIGHT OF WAY.
4. ALL EXISTING PAVEMENT SHALL BE SAW CUT TO CREATE SMOOTH LINES AND EDGES PRIOR TO PAVING.
5. PATCH SECTION SHALL MATCH EXISTING SECTION OR THE MINIMUM THICKNESS AS FOLLOWS:
   A. ASPHALT CONCRETE – 4 – INCHES, 2 – LIFTS MINIMUM
   B. BASE MATERIAL – MATCH EXISTING OR 8 – INCH MINIMUM
   C. IF REQUIRED, CEMENT TREATED BASE (CTB) AND CONTROLLED DENSITY FILL (CDF) – 18 – INCH MINIMUM
   D. FLOWABLE FILL – FULL DEPTH OF TRENCH
6. EXCEPT AS NOTED, ALL WORK TO CONFORM TO OREGON 2008 STANDARD SPECIFICATIONS. SEEE SECTION 745 FOR HMAC PAVEMENT AND SECTION 495.40(e) FOR TACK COAT EDGES.

CITY OF FLORENCE STANDARD DRAWING

STREET CUT

DATE: MAY 2011 | DRAWING NO. F-213

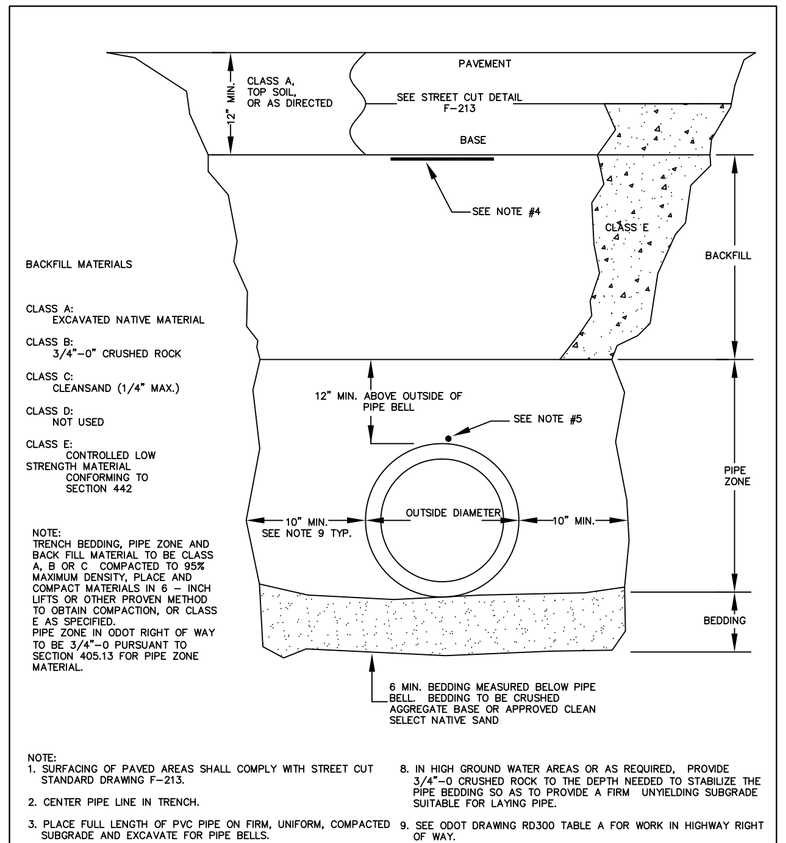

NOTE:
TRENCH BEDDING, PIPE ZONE AND BACK FILL MATERIAL TO BE CLASS A, B OR C COMPACTED TO 95% MAXIMUM DENSITY, PLACE AND COMPACT MATERIALS IN 6 INCH LIFTS OR OTHER PROVEN METHOD TO OBTAIN COMPACTION, OR CLASS E AS SPECIFIED.
PIPE ZONE IN ODOT RIGHT OF WAY TO BE 3/4"-0 PURSUANT TO SECTION 405.13 FOR PIPE ZONE MATERIAL.

NOTE:

1. SURFACING OF PAVED AREAS SHALL COMPLY WITH STREET CUT STANDARD DRAWING F-213.
2. CENTER PIPE LINE IN TRENCH.
3. PLACE FULL LENGTH OF PVC PIPE ON FIRM, UNIFORM, COMPACTED SUBGRADE AND EXCAVATE FOR PIPE BELLS.
4. PLACE DETECTION TAPE ABOVE PIPE BETWEEN SUBGRADE AND BASE.
5. PLACE TRACER WIRE ON TOP OF PIPE AND HOLD IN PLACE WITH DUCT TAPE AT 10' INTERVALS OR WRAP WIRE AROUND PIPE. DETECTABLE MARKING WIRE SHALL BE NO 12 AWG, MINIMUM, SOLID COPPER WITH COLORED POLYETHYLENE INSULATION – BLUE FOR WATER AND GREEN FOR SEWER (TYP.).
6. SUBMIT DETECTION WIRE CONTINUITY AND ISOLATION TESTS, PRESSURE TESTS, AND BACTERIOLOGICAL TESTS TO ENGINEER. SUBMIT TESTS PRIOR TO SURFACE RESTORATION WORK WHEN POSSIBLE.
7. EXCEPT AS NOTED ALL WORK TO CONFORM TO OREGON 2008 STANDARD SPECIFICATIONS.
8. IN HIGH GROUND WATER AREAS OR AS REQUIRED, PROVIDE 3/4"-0 CRUSHED ROCK TO THE DEPTH NEEDED TO STABILIZE THE PIPE BEDDING SO AS TO PROVIDE A FIRM UNYIELDING SUBGRADE SUITABLE FOR LAYING PIPE.
9. SEE ODOT DRAWING RD300 TABLE A FOR WORK IN HIGHWAY RIGHT OF WAY.

CITY OF FLORENCE STANDARD DRAWING

UTILITY TRENCH

DATE: MAY 2011 | DRAWING NO. F-301

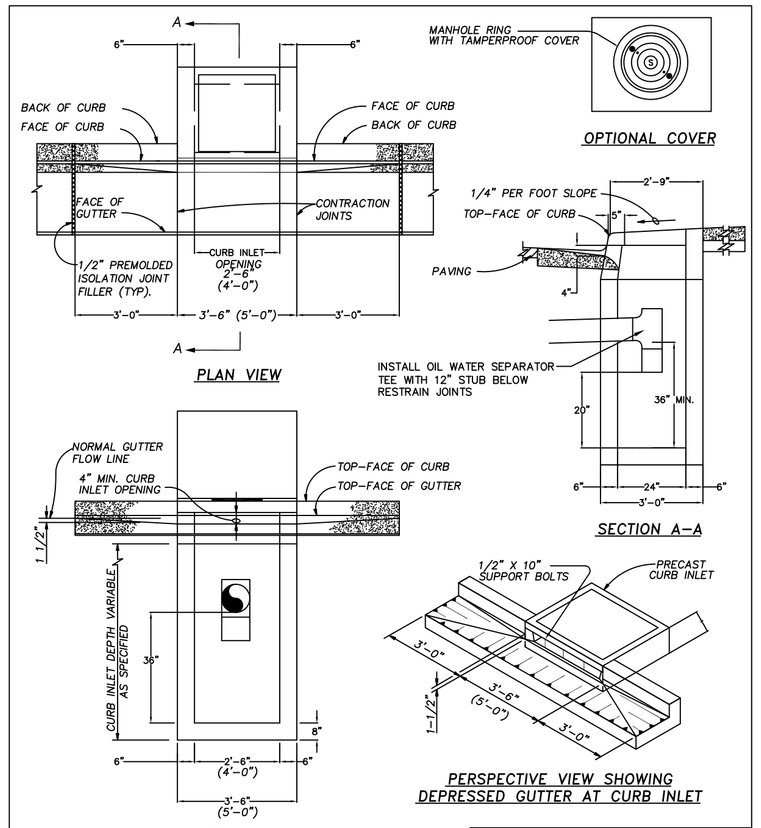

NOTES:

1. CURB INLET TOP AND BASE SHALL MEET H20 LOADING.
2. CURB INLET BASE MAY BE PRECAST OR CAST-IN-PLACE.
3. FOR STEEP GRADES USE STD. PRECAST INLET WITH 4'-0" OPENING OR TWO 2'-6" OPENING INLETS.
4. CONCRETE STRENGTH SHALL BE 3000 PSI.
5. ALL FABRICATED METAL PARTS SHALL BE HOT-DIPPED GALVANIZED AFTER FABRICATION.
6. DIMENSIONS SHOWN ABOVE IN PARENTHESIES ARE FOR 4A INLETS.
7. A 1 1/2 A INLET SHALL HAVE A CURB INLET OPENING WIDTH OF 1'6" AND AN OUTSIDE WIDTH OF 2'6"; ALL OTHER DIMENSIONS AND DETAILS SHALL BE AS SHOWN.

CITY OF FLORENCE STANDARD DRAWING

PRECAST CURB INLET 1 1/2A, 2 1/2A 4A

DATE: DEC 2011 | DRAWING NO. F304 (MODIFIED)

REVISIONS:

REGISTERED PROFESSIONAL ENGINEER 15479 OREGON JULY 25, 1991 DANIEL P. GRIBER

Expiration: 6-30-2013

STANDARD DRAWING DETAILS

CITY OF FLORENCE, OREGON

FURA PROJECTS 2012 PHASE 1 QUINCE ST. UTILITIES

LINE IS 2 INCHES AT FULL SIZE (IF NOT 2"-SCALE ACCORDINGLY)

C:\Documents and Settings\Darby\My Documents

FILE ____ DRAWN DPG DESIGNED DPG CHECKED ____ CHECKED ____

SCALE AS SHOWN

DRAWING NUMBER D1

SHEET NUMBER 9 OF 10