**CITY OF FLORENCE**
**PLANNING COMMISSION**

**RESOLUTION PC 20 21 VAR 01**

A REQUEST FOR A VARIANCE TO SIDE YARD SETBACKS AND RIVER CUTBANK SETBACKS TO REPLACE A DECK AT 985 ALDER STREET, FLORENCE, OREGON, AT ASSESSOR'S MAP 18-12-27-32 TAX LOTS 05600, 05700, AND 06700

**WHEREAS,** application was made by Steve Oldham, on behalf of Mark and Elizabeth Holden, for approval of a variance request as required by FCC 10-1-1-4, FCC 10-1-1-6-3, and FCC 10-5-3; and

**WHEREAS,** the Planning Commission met in a duly-advertised public hearing on August 11, 2020, as outlined in Florence City Code 10-1-1-6-3, to consider the application, evidence in the record, and testimony received; and

**WHEREAS,** the Planning Commission of the City of Florence, per FCC 10-5-4 and FCC 10-5-5, finds, based on the Findings of Fact, application, staff recommendation, evidence, and testimony presented to them, that the application meets the applicable criteria through compliance with certain Conditions of Approval.

**NOW THEREFORE BE IT RESOLVED** that the Planning Commission of the City of Florence finds, based on the Findings of Fact and the evidence in record that:

The request for a reduction in setback requirements meets the applicable criteria in Florence City Code and the Florence Realization 2020 Comprehensive Plan with the conditions of approval as listed below.

**Conditions of Approval:**

The application, as presented, meets or can meet applicable City codes and requirements, provided that the following conditions of approval are met.

**1.** Approval for shall be shown on:

| |
|---|
| "A" Findings of Fact |
| "B" Land Use Application |
| "C" Proposed Site Plan |
| "D" Deck Plans and Elevations |
| "E" Emile Mortier Site Investigation |

Findings of Fact attached as Exhibit "A" are incorporated by reference and adopted in support of this decision. Any modifications to the approved plans or changes of use, except those changes relating to Building Codes, will require approval by the Community Development Director or Planning Commission/Design Review Board.

**2.** Regardless of the content of material presented for this Planning Commission, including application text and exhibits, staff reports, testimony and/or discussions, the applicant agrees to comply with all regulations and requirements of the Florence City Code which are current on this date, EXCEPT where variance or deviation from such regulations and requirements has been specifically approved by formal Planning Commission action as documented by the records of this decision and/or the associated Conditions of Approval. The applicant shall submit to the Community Development Department a signed "Agreement of Acceptance" of all conditions of approval prior to issuance of a building permit and apply for all building permits necessary for this proposal.

**3.** Upon encountering any cultural or historic resources during construction, the applicant shall immediately contact the State Historic Preservation Office and the Confederated Tribes of Coos, Lower Umpqua, and Siuslaw Indians. Construction shall cease immediately and shall not continue until permitted by either a SHPO or CTCLUSI representative.

**4.** The proposed deck must be built to the requirements of the Oregon State Building Code and other applicable construction and fire codes.

**5.** Construction of the proposed deck shall not expand the structure beyond the current extent of the ground-level concrete patio and the existing concrete wall along the south property line. No approval for expansion of the site's impervious surface area is included in this variance.

**6.** At the close of the appeal period, the variance shall become effective. The authorization for a variance shall be void after August 11, 2021, unless a building permit for the deck is active at that time. The variance shall be void if a building permit for the deck expires after August 11, 2021.

**7.** Prior to August 11, 2021, all exterior lighting shall comply with the requirements of FCC 10-37.

**ADOPTED BY THE FLORENCE PLANNING COMMISSION/DESIGN REVIEW BOARD** the 11th day of August, 2020

_____ _____

JOHN MURPHEY, Chairperson DATE
**Florence Planning Commission**

**STAFF REPORT & FINDINGS**
**FLORENCE COMMUNITY DEVELOPMENT DEPARTMENT**
**Planning Commission**
**Exhibit "A"**

**Public Hearing Date:** August 11, 2020 **Planner:** Dylan Huber-Heidorn
**Date of Report:** August 4, 2020
**Application:** PC 20 21 VAR 01

## I. PROPOSAL DESCRIPTION

**Proposal:** A request for a variance to side yard setbacks and river cutbank setbacks to replace a deck which was originally constructed without permits or variances

**Applicant:** Steve Oldham

**Property Owners:** Mark and Elizabeth Holden

**Location:** 985 Alder Street

**Site:** Map # 18-12-27-32 Tax lots 05600, 05700, & 06700

**Comprehensive Plan Map Designation:** Low Density Residential

**Zone Map Classification:** Low Density Residential

**Surrounding Land Use / Zoning:**

| | |
|---|---|
| Site: | Single-Family Residence / Low Density Residential; Residential Shorelands Overlay |
| North: | Single-Family Residence / Low Density Residential |
| South: | Single-Family Residence / Low Density Residential |
| East: | Single-Family Residence / Low Density Residential |
| West: | Siuslaw River / Conservation Estuary |

**Streets / Classification:**
West – None; North – 9th Street / Local; East – Alder Street / Local; South – None

## II. NARRATIVE:

The house at 985 Alder Street was constructed in 1989, and a deck was added at some later date. Building permit records and site plans from previous land use applications do not include a deck. The deck was in place when the current owners purchased the property in 2013. There is also a small shed which sits partially under the existing deck and protrudes closer to the river than any part of the deck. The shed would not have required building permits due to its size, but would have required a variance.

The applicant, who is a licensed contractor, approached the Community Development Department in June 2020 to discuss building permits to replace the deck. The owners of the property wish to rebuild the deck entirely, including structural changes to strengthen the structure and bring it up to current building codes. The proposed reconstruction would expand the footprint of the existing deck by several inches in one location in order to widen the exterior staircase to meet current building codes, but the footprint of the deck would otherwise be identical. New materials such as glass panel railing would also be added.

The existing deck is L-shaped and runs along the entire western wall of the second story of the house and wraps around a portion of the southern wall. On the ground floor, most of the support posts for the deck rest on a concrete porch slab. Along the south property line, the remaining support posts rest on a 36" stem wall, which was also constructed without a permit. The stem wall and the southern edge of the deck were built at the property line with zero setback.

The property owner obtained a variance in 2015 for reduced setbacks for a detached garage roughly 80' east of the house (PC 15 05 VAR 01). That application did not mention or make issue of the deck, but it also did not grant any form of approval that would apply to the deck or stem wall.

Because no variance was given for the location of the deck, it was determined that replacing it would require variance approval. Documents were received and the application was deemed complete on June 29, 2020.

As established in PC 15 05 VAR 01, the frontage designation for this lot is complicated by past vacations of public rights-of-way. The end result is that the southern property line is the rear property line, and this request for a variance therefore applies to the rear yard setback. This setback requirement is discussed in review of FCC 10-10.

This application is also a request for a variance from the setback from the Siuslaw River's cutbank. Staff finds that the steep slope west of the house is likely subject to erosion caused by the river during flood events, and the slope is therefore a cutbank. The Hazards Map indicates the possible presence of a cutbank in this location as well. The deck is roughly 28' from the top of the cutbank at the nearest point. This setback requirement is discussed in review of FCC 10-19.

## III. NOTICES & REFERRALS:

**Notice:** On July 22, 2020, notice was mailed to surrounding property owners within 300 feet of the property and a sign was posted on the property. Notice was published in the Siuslaw News on August 5, 2020.

At the time of this report, the City had received no public comments.

**Referrals:** On July 29, 2020, referrals were sent to the Florence Building Department, Florence Building Official, Florence Code Enforcement, NW Code Professionals, Florence Public Works, and Siuslaw Valley Fire and Rescue.

At the time of this report, the City had received the following referral comments:

**Dave Mortier, Florence Building Official**

Mr. Dave Mortier raised issues with the plans for the deck replacement from a building code standpoint. He stated that structures built within three feet of a property line must meet additional fire codes. In this case, the deck would need to be constructed with noncombustible materials in order to meet building codes and obtain a building permit.

**Staff response:** as of the time of this report, staff had not received additional information from the applicant to address these building code concerns. Staff finds that the variance application can be reviewed separately from the construction details.

The proposed deck must be built to the requirements of the Oregon State Building Code and other applicable construction and fire codes. **(Condition 4)**

## IV. APPLICABLE REVIEW CRITERIA

**Criteria Applying to this Matter for the application include:**

**Florence City Code, Title 10:**

Chapter 1: Zoning Administration, Sections 1-4, 1-5, and 1-6-3
Chapter 5: Zoning Adjustments and Variances, Sections 2, 3, 4, 6, and 7
Chapter 7: Special Development Standards, Sections 2, 3, and 6
Chapter 10: Residential Districts, Section 4
Chapter 19: Estuary, Shorelands, and Beaches and Dunes, Sections 3 and 6
Chapter 37: Lighting, Sections 2, 4, and 5-R

## V. PROPOSED FINDINGS

Code criteria are listed in **bold**, with staff response beneath. Only applicable criteria have been listed.

## FLORENCE CITY CODE

## TITLE 10: CHAPTER 1: ZONING ADMINISTRATION

### 10-1-1-6-3 LAND USE HEARINGS:

**A. Hearings are required for Type III (quasi-judicial) land use matters requiring Planning Commission review. Type III applications include, but are not limited to:**

**8. Variances**

The applicant is requesting a variance to two types of setbacks. The application is being decided by the Planning Commission as a quasi-judicial land use matter.

**B. Notification of Hearing:**

**1. At least twenty (20) days prior to a quasi-judicial hearing, notice of hearing shall be posted on the subject property and shall be provided to the applicant and to all owners of record of property within 100 feet of the subject property, except in the case of hearings for Conditional Use Permits, Variance, Planned Unit Development and Zone Change, which notice shall be sent to all owners of record of property within 300 feet of the subject property.**

**2. Prior to a quasi-judicial hearing, notice shall be published one (1) time in a newspaper of general circulation.**

Notification of the quasi-judicial land use hearing for this application was posted to the property and mailed on July 22, 2020, to all property owners within 300 feet of the subject property. A notice was also published in the Siuslaw News one time on August 5, 2020. These criteria are met.

**C. Notice Mailed to Surrounding Property Owners – Information provided:**

**1. The notice shall:**

**a. Explain the nature of the application and the proposed use or uses which could be authorized;**

**b. List the applicable criterion from the ordinance and the plan that apply to the application at issue;**

**c. Set forth the street address or other easily understood geographical reference to the subject property;**

**d. State the date, time and location of the hearing;**

**e. State that failure of an issue to be raised in a hearing, in person or by letter, or failure to provide sufficient specificity to afford the decision maker an opportunity to respond to the issue precludes further appeal based on that issue;**

**f. State that application and applicable criterion are available for inspection at no cost and will be provided at reasonable cost;**

**g. State that a copy of the staff report will be available for inspection at no cost at least 7 days prior to the hearing and will be provided at reasonable cost;**

**h. Include a general explanation of the requirements for submission of testimony and the procedure for conduct of hearings.**

**i. Include the name of a local government representative to contact and the telephone number where additional information may be obtained.**

The notice mailed to surrounding property owners consistent with the criteria noted above. The application was properly noticed and these criteria are met.

**D. Hearing Procedure: All quasi-judicial hearings shall conform to the procedures of Florence City Code Title 2 Chapter 10.**

The Planning Commission is scheduled to meet and decide upon the application in accordance with FCC 2-10 on August 11, 2020.

**E. Action by the Planning Commission:**

**1. At the public hearing, the Planning Commission shall receive all evidence deemed relevant to the issue. It shall then set forth in the record what it found to be the facts supported by reliable, probative and substantive evidence.**

**2. Conclusions drawn from the facts shall state whether the ordinance requirements were met, whether the Comprehensive Plan was complied with and whether the requirements of the State law were met.**

**3. In the case of a rezoning request, it shall additionally be shown that a public need exists; and that the need will be best served by changing the zoning of the parcel of land in question.**

**4. There is no duty upon the Planning Commission to elicit or require evidence. The burden to provide evidence to support the application is upon the applicant. If the Planning Commission determines there is not sufficient evidence supporting the major requirements, then the burden has not been met and approval shall be denied.**

The Planning Commission will receive all evidence available and deemed relevant at the public hearing. The Planning Commission may deny approval should they determine that insufficient evidence has been provided to indicate that the application meets the applicable criterion. The burden to supply such evidence is upon the applicant.

## TITLE 10: CHAPTER 5: ZONING VARIANCES

**10-5-2: LIMITATIONS: An adjustment or variance shall not be granted as a substitute for, or in lieu of, a change in zone. An adjustment or variance does not apply to use regulations**

**B. Variances: Requests to vary standards beyond the adjustments allowed in Section 10-5-2-A shall be subject to the review process and approval criteria for variances. The Planning Commission may grant a variance to**

**a regulation through the Type III Review process in Section 10-1-1-6-3 as prescribed by this Title with respect to the following:**

**3. Front, side or rear yards.**

**9. Any request to vary numerical standards beyond 10%.**

The applicant requests a rear yard variance of 100% to replace the deck on the property line (a 5' reduction). The applicant also requests a 44% reduction to the 50' cutbank setback in order to replace the deck in its current location 28' from the top of the cutbank.

Conditions are addressed below.

**10-5-3: APPLICATION:**

**B. The application for variance shall be made in writing to the Planning Commission by the owner(s) of the land in consideration or their agent(s), duly authorized in writing.**

This criterion is met by the application form submitted by Steve Oldham on June 29, 2020.

**10-5-4: APPROVAL CRITERIA:**

**A. General: An application for an adjustment or variance must describe in detail:**

**1. The practical difficulties and physical hardships involved.**

**2. Existing conditions on the site.**

**3. Reasons for the proposed adjustment or variance being the most practicable solution to the problem.**

**4. A sight plan, drawn to scale, showing the dimensions and arrangement of the proposed development in comparison to the existing standard(s).**

**5. Any other pertinent information requested by the Planning Director or Planning Commission.**

**C. Variances: The Planning Commission may grant a variance to a regulation prescribed by this Title and may attach such conditions to the granting of all or a portion of any variance as necessary to achieve the purpose of this chapter if, on the basis of the petition, investigation and evidence submitted, the Planning Commission finds:**

**1. Strict or literal interpretation and enforcement of the specified regulations would result in practical difficulty or unnecessary physical hardship inconsistent with the objectives of this Title.**

Strict or literal interpretation of the rear yard setback and river cutbank setback would mean that the pre-existing, nonconforming deck could not be replaced. Piecemeal repair would be possible, but the property owners desire to entirely replace the structure to bring it up to current building codes, which would make it significantly stronger and safer. When the deck is unable to be repaired, it would need to be removed. Especially in light of the fact that the current owners were not responsible for building the deck without permits or variance approvals, staff finds that strict enforcement would result in unnecessary physical hardship.

Another consideration as it applies to literal interpretation is the definition of "rear yard". Due to the street vacations in the area the line identified as the rear would typically be a side yard on most other lots with a corresponding 5' setback for this district. This does not change the percentage of variance request but does alter the context of the request. This request on a typical lot would be a request to the side yard rather than the rear.

The concrete patio and stem wall at ground level, which serve as the foundation for the deck, are also pre-existing and nonconforming.

**2. One of the following:**

**a. There are exceptional or extraordinary circumstances or conditions applicable to the property involved which do not apply generally to other properties classified in the same zoning district, or**

**b. The granting of the variance will not constitute a grant of special privilege inconsistent with the limitations on other properties classified in the same zoning district.**

The house plans were created at roughly the same time or soon after code changes were made in 1988. Those changes resulted in the modern Site Investigation Report requirements and the current 50' river cutbank setback. Evidence of the conversations at the time are sparse, but the Building Official at the time, Laura Gillispie, apparently approved the location of the house after an engineer attested to the site's stability (see Exhibit E, also discussed later in this report). Any deck or other structure built west of the house would be limited by this setback, but the site was laid out before this code was in place or before it was being enforced the way it is today. Other properties, if they were being designed today, could accommodate this setback during development. Staff finds the nonconforming location of the house to be an exceptional circumstance applicable to the property.

Staff also finds that exceptional conditions are present regarding the rear yard setback. The pre-existing nonconforming patio and stem wall will be in place no matter the outcome of this review. Replacing the deck will not increase the footprint of the home site. As with the river setback, other properties could accommodate the rear yard setback during initial design or, if they were attempting to add a deck in the setback at a later date, they would need to expand the footprint of the structures to do so.

These criteria are met.

**3. The granting of the variance will not be detrimental to the public health, safety or welfare or materially injurious to properties or improvements in the vicinity.**

The only property adjacent to the proposed deck is the residential property to the south. This property is separated from the subject property by at least 20' of native vegetation and a small hill. The property owners were notified of the application and did not provide testimony. Staff finds that granting the variance will not pose a risk to this or other properties in the vicinity.

Construction in the river cutbank setback can be detrimental to public welfare for a variety of reasons, including increased risk of bank destabilization, pollution of the river with sediment runoff, and reduction in other ecosystem services provided by the river and intact streambanks. In this case, staff finds that the proposed deck replacement—with its identical footprint—would not be detrimental in these ways. Prior to construction of the house in 1989, the site was reviewed by a civil engineer, who found no hazardous concerns with the proposal. Discussion of his review is included in discussion of FCC 10-7 below.

This criterion is met.

**4. The Variance is the minimum necessary to address the special or unique physical circumstances related to the subject site.**

Approving the variance with the condition detailed below would allow the deck to be replaced without expanding beyond the footprint of the concrete patio and stem wall. With the previously discussed findings that replacing the deck is a reasonable objective, staff finds that a variance for construction within this footprint is the minimum necessary to address the conditions on the site. This criterion is met.

Construction of the proposed deck shall not expand the structure beyond the current extent of the ground-level concrete patio and the existing concrete wall along the south property line. No approval for expansion of the site's impervious surface area is included in this variance. **(Condition 5)**

**10-5-6: EFFECTIVE DATE: A variance shall become effective at the close of the appeal period.**

**10-5-7: EXPIRATION OF VARIANCE: Authorization of a variance shall be void one (1) year after the date of approval of a variance application, unless a building permit has been issued and substantial construction pursuant thereto has taken place. Substantial construction shall be considered to be completion of a building foundation. The applicant may apply to the Planning Commission for a one-time extension of one (1) year maximum duration based on compliance with the following criteria:**

**A. The request for an extension is made in writing prior to expiration of the original approval**

**B. There are special or unusual circumstances that exist which warrant an extension**

**C. No material changes of surrounding land uses or zoning has occurred.**

**The Planning Commission may deny the request for an extension of a variance if new land use regulations have been adopted that affect the applicant's proposal. (Ord. 26, 2008)**

Completion of a building foundation would normally constitute substantial construction of a project, but in this case, the foundation is an existing patio which serves its own purpose, unlike a building foundation which exists only to support the building. Because construction of the deck would involve so few inspections and such a quick timeline, staff finds that holding an active building permit would constitute substantial construction. Keeping a building permit active requires scheduling inspections no more than six months apart. Without this interpretation, the variance approval could extend indefinitely once a building permit had been issued, even if that permit expired and no new work had been completed.

At the close of the appeal period, the variance shall become effective. The authorization for a variance shall be void after August 11, 2021, unless a building permit for the deck is active at that time. The variance shall be void if a building permit for the deck expires after August 11, 2021. **(Condition 6)**

## TITLE 10: CHAPTER 7: SPECIAL DEVELOPMENT STANDARDS

**10-7-2: IDENTIFICATION OF WETLANDS AND RIPARIAN AREAS AND POTENTIAL PROBLEM AREAS: At minimum, the following maps shall be used to identify wetlands and riparian areas and potential problem areas:**

**A. "Hazards Map", Florence Comprehensive Plan Appendix 7.**

The site sits in an area along the Siuslaw River identified in the Hazards Map as subject to the risks associated with river cutbanks. City code treats it as a potential problem area.

**10-7-3: DEVELOPMENT STANDARDS FOR POTENTIAL PROBLEM AREAS: The following standards shall be applied to development in potential problem areas unless an approved Phase I Site Investigation Report or an on-site examination shows that the condition which was identified in the Comprehensive Plan or Overlay Zoning Map does not in fact exist on the subject property. These standards shall be applied in addition to any standards required in the Zoning Districts, Comprehensive Plan, and to any requirements shown to be necessary as a result of site investigation. Where conflicts or inconsistencies exist between these Development Standards, City Code, and the Comprehensive Plan, the strictest provisions shall apply unless stated otherwise.**

**B. River Cutbanks: No building shall be permitted within fifty feet (50') from the top of a river cutbank.**

After inspecting the site, staff finds that slope roughly 28' west of the existing deck is a river cutbank. Its formation is clearly dependent on the presence of the river, and it is subject to erosion by the river during flood events. Building or replacing a structure within 50' of the top of the cutbank requires a variance.

Photo: the lower bank of the Siuslaw River

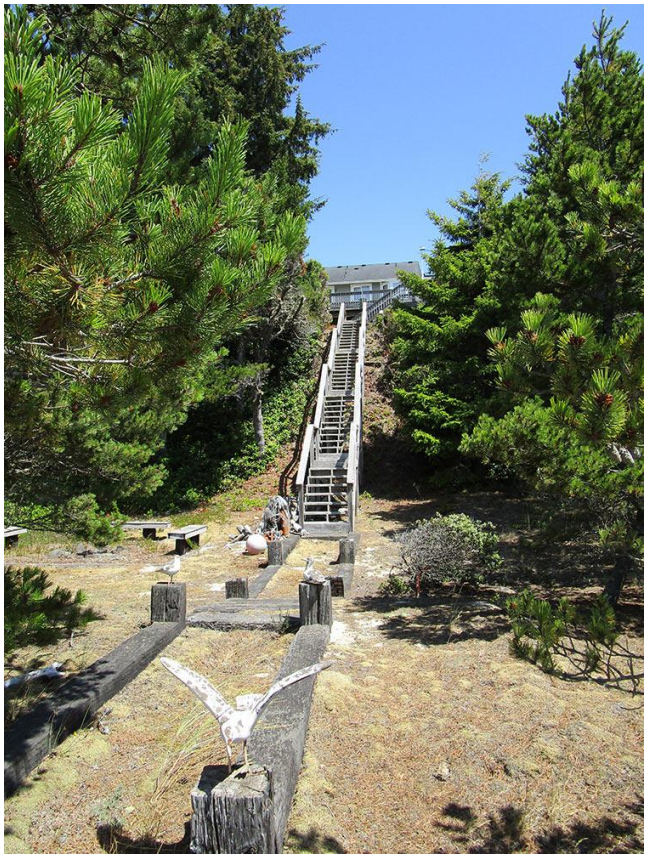

Photo: same location, looking toward the house and cutbank

**10-7-6: SITE INVESTIGATION REPORTS (SIR):**

**A. Areas identified in Section 2 and 3 above, are subject to the site investigation requirements as presented in "Beach and Dune Techniques: Site Investigation Reports by Wilbur Ternyik "from the Oregon Coastal Zone Management Association's Beaches and Dunes Handbook for the Oregon Coast (OCZMA Handbook), Appendix 18 of the Florence Comprehensive Plan as modified by the City of Florence. No development permit (such as building permit or land use permit) subject to the provisions of this Title may be issued except with affirmative findings that:**

**1. Upon specific examination of the site utilizing a Phase I Site Investigation Report (the checklist from the OCZMA Handbook, as modified by the City of Florence), it is found that the condition identified on the "Hazards Map" or "Soils Map" or "Beaches and Dunes Overlay Zone" or other identified problem area does not exist on the subject property; or**

**2. As demonstrated by the Phase II Site Investigation Report that harmful effects could be mitigated or eliminated through, for example, foundation of structural engineering, setbacks or**

**dedication of protected natural areas. (Amended by Ord. No. 10, Series 2009)**

**Site investigation requirements may be waived where specific standards, adequate to eliminate the danger to health, safety and property, have been adopted by the City. This exception would apply to flood-prone areas, which are subject to requirements of the National Flood Insurance Program and other problem areas which may be adequately protected through provisions of the Building Code.**

The only official statement staff identified regarding the stability and safety of the site is a report made during construction of the house in 1989 by Emile Mortier, P.E, a registered civil, structural-architectural, and fire protection engineer (see Exhibit E). Mr. Mortier visited the site after it was graded but before construction of the home had begun. He concluded that the proposed house site was stable and met the requirements of code in effect at that time regarding special development standards and potential problem areas. Mr. Mortier's assessment of the site did not apply to the deck, however, which was added later. Notably, Mr. Mortier also discussed the benefits of constructing a retaining wall along the south property line to control any sloughed material from the vegetated slope there. He also made mention of the river setback being adequate due to the stability of the vegetation and slope. He stated the proposed foundation should be built to 2000 psi. Mr. Mortier used what is now Oregon Residential Specialty Code R401.4 related to sandy soils to mitigate any potential risk. An assumption would be that the code related to residential structures adjacent to slopes was followed if it existed at that time, Oregon Residential Specialty Code Figure R403.1.9.1. This building code has been used to meet the criteria of Title 10 Chapter 7 Phase 1 SIR requirements.

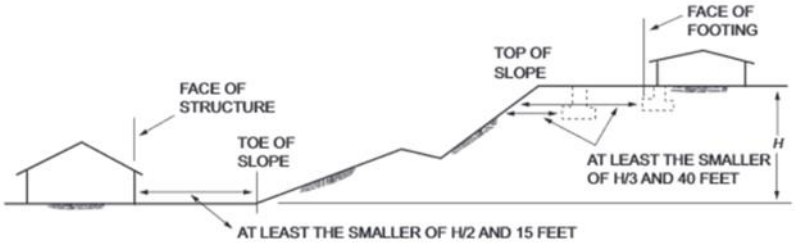


For SI: 1 foot = 304.8 mm.

**FIGURE R403.1.9.1**
**FOUNDATION CLEARANCE FROM SLOPES**

When staff visited the site, no significant erosion was observed on the slope below the cutbank, and the vegetation holding the bank in place is currently healthy. Mr. Mortier's finding that the site is stable appears to hold true today.

Given that replacing the deck would require no new ground disturbing activities or hazards to the integrity of the site, staff finds that Mr. Mortier's letter is adequate to demonstrate the stability of the site in lieu of a Phase 1 Site Investigation Report. Such a report would not be likely to provide additional information relevant to reconstruction of the deck as proposed. There are specific standards in place which are adequate to eliminate the danger to health, safety, and property. Specifically, building activities within 50' of the river cutbank are limited by FCC 10-7-3-B, and any requests to build in this area are assessed on a case-by-case basis by the Planning Commission through a variance process.

## TITLE 10: CHAPTER 10: RESIDENTIAL DISTRICTS

### 10-10-4: LOT AND YARD PROVISIONS:

**D. Yard Regulations: Unless an adjustment or variance is granted in accordance with Chapter 5 of this Title, minimum setbacks and yard regulations shall be as indicated below:**

Table 10-10-4-D. Minimum setbacks and yard regulations.

| | LDR | MDR | RMH | HDR |
|---|---|---|---|---|
| **Front** | | | | |
| Primary | 10 ft. | 10 ft. | 10 ft. | 5 ft.[1] |
| Garage or Carport vehicular entrance wall | 20 ft. | 20 ft. | 20 ft. | 20 ft. |
| **Side** | | | | |
| Primary[2] | 10 ft. | 5 ft. | 5 ft. | 5 ft.[1] |
| Accessory Building | 5 ft. | 5 ft. | 5 ft. | 5 ft. |
| Accessory Dwelling Unit | 10 ft. | 5 ft. | 5 ft. | 5 ft. |
| Parking Lot, Garage or Carport | 10 ft. | 5 ft. | 5 ft. | 5 ft. |
| Garage or Carport vehicular entrance wall | 20 ft. | 20 ft. | 20 ft. | 20 ft. |
| **Rear[1]** | | | | |
| Primary | 10 ft. | 5 ft. | 5 ft. | 5 ft.[1] |
| Accessory Building | 5 ft. | 5 ft. | 5 ft. | 5 ft. |
| Accessory Dwelling Unit | 10 ft. | 5 ft. | 5 ft. | 5 ft. |
| Parking Lot, Garage or Carport | 10 ft. | 10 ft. | 10 ft. | 10 ft. |
| Garage or Carport vehicular entrance wall | 20 ft. | 20 ft. | 20 ft. | 20 ft. |

[1]Single-family detached and duplex dwellings in the HDR District shall have the same front, side and rear yard regulations as the MDR District.

[2]Minimum side setbacks may be reduced to zero feet (0') for attached primary structures where they share a common wall with a structure on an adjacent lot.

[3]For a corner lot or parcel which adjoins the point of intersections of two streets as defined in "Lot Type Corner" both lot or parcel lines are the front line. The sum of these setbacks shall not fall below the sum of the minimum front and side yard requirements for primary building and no setback shall be below the minimum primary side yard requirement for the district.

As detailed in the findings of PC 15 05 VAR 01, including the diagram below, the south lot line is the rear lot line. The rear yard setback for an accessory structure on this property in the Low Density Residential District is 5'. Reduction of this setback requires a variance.

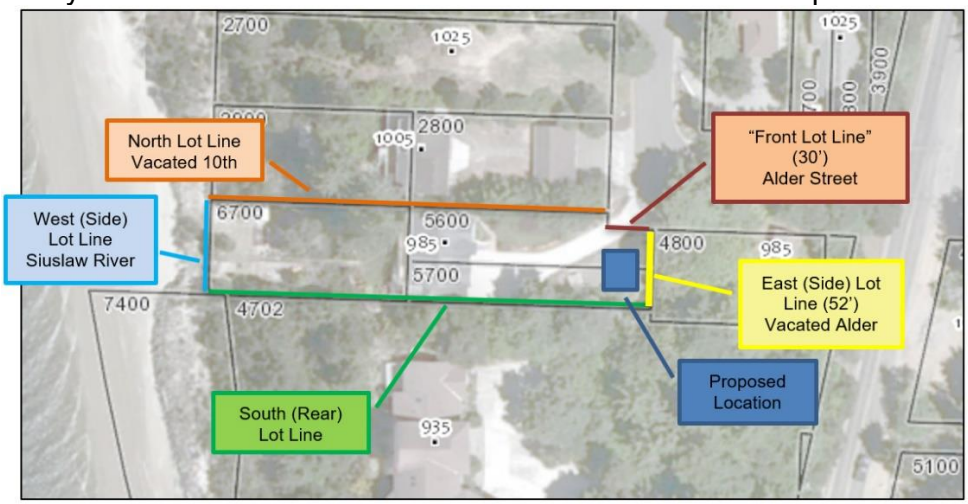

## TITLE 10: CHAPTER 19: ESTUARY, SHORELANDS, AND BEACHES AND DUNES

### 10-19-3: CONSERVATION ESTUARY DISTRICT

**A. Purpose and Extent: The purpose of the Conservation Estuary District (CE) is to provide for the long-term use of the estuary's renewable resources in ways which do not require major alteration of the estuary. Providing for recreational and aesthetic uses of the estuarine resources as well as maintenance and restoration of biological productivity are primary objectives in this District. The boundaries of the CE District are defined by natural features. The CE District includes minor tracts of salt marsh, tideflats, eelgrass and algae beds; and those not included in the Natural Estuary District (NE). This District also includes oyster and clam beds and areas immediately adjacent to developed estuarine areas. These are as identified on the City Zoning Map as specified by this Title.**

This site is located upland and is not located in the areas for which the criteria of the Conservation Estuary District directly apply. The uses allowed in this zone also apply to the adjacent SR overlay, discussed below.

### 10-19-6: SHORELAND RESIDENTIAL OVERLAY DISTRICT /SR

**A. Purpose: The Shoreland Residential Overlay District (/SR) is applied to residential development management units in the Comprehensive Plan along the Siuslaw River Estuary and Munsel Lake (a Coastal Lake). It is the purpose of the /SR Overlay District to encourage long-term human use of these coastal resources in a manner which protects the qualities of coastal water bodies and respects the natural systems. Activities which protect or enhance renewable resources are encouraged, as are recreation and public access to coastal water. If the shorelands are adjacent to the estuary, refer to the adjacent Estuary District for additional allowed uses and criteria. The requirements of any adjacent Estuary District shall supersede the requirements of this Section of the Code. Shoreland uses and buffer zones shall not prohibit land-side components of activities and uses as otherwise permitted in the adjacent estuary.**

**The /SR District is specifically designed to carry out the following purposes:**

**1. Protection of such natural resources as soil and such natural systems as drainage courses and waterways.**

**2. Enhancement of renewable resources such as the coastal fisheries.**

**3. Allow for recreation and public access to coastal water.**

**B. Permitted Uses: In addition to uses specifically allowed in the adjacent Estuary District, the following structures and uses, and no others, are permitted outright when consistent with all of the requirements of the adjacent Estuary District and applicable site development requirements listed in subsections E and F:**

**3. Uses and buildings permitted outright in the base zoning district.**

The single-family residence is an allowed use in the base Low Density Residential District zoning and is therefore an allowed use in the Shoreland Residential Overlay District. The deck is an allowed accessory structure for this use. These criteria are met.

**F. Additional Setback Requirements: Setbacks shall be as required in the base zoning district plus the additional setback requirements specified herein.**

**1. In addition to the yard setbacks required in the Base zoning district, a 50 foot buffer zone is required along the estuary (as measured from the mean high tide) and Coastal Lakes (as measured from the average high water). Use of this 50 foot buffer zone shall be as specified in 10-19-6-E.**

The buffer discussed in this code section is measured from the mean high tide line, which is roughly 140' from the proposed deck. This buffer and the criteria specified in FCC 10-19-6-E do not apply to this application.

## TITLE 10: CHAPTER 37: LIGHTING

**10-37-2: APPLICABILITY: Section 10-37 applies to installation of all lighting fixtures as of the effective date of this Ordinance, except as exempted by provision of this Ordinance. Devices include but are not limited to, lights for: buildings and structures, recreational areas, parking lot and maneuvering areas, landscape areas, streets and street signs, product display areas, building overhangs and open canopies, holiday celebrations, and construction lights.**

**B. Major Additions or Alterations - If a major addition occurs on a property, lighting for the entire property shall comply with the requirements of this Code. For purposes of this section, the following are considered to be major additions:**

**3. Existing lights on sites requiring a conditional use permit or variance after the effective date of this ordinance.**

**10-37-4: LIGHTING STANDARDS:**

**A. All exterior lighting fixtures subject to this code section must be designed as a full cut-off fixture or have a shielding method to direct light emissions downward below the horizontal plane onto the site and does**

**not shine illumination or glare skyward or onto adjacent or nearby property.**

**C. Lighting in or adjacent to residential zones or residential uses shall not exceed twenty feet in height as measured from the adjacent grade to the top of the light fixture. Heights in other zoning districts shall not exceed 25 feet unless the Design Review Board adopts findings that the higher light fixtures are necessary to achieve proper illumination levels.**

**10-37-5: EXEMPTIONS:**

**R. In addition to exceptions mentioned above the below apply to residential uses.**

**1. One partly shielded or unshielded luminaire at the main entry, not exceeding 630 lumens.**
**2. Any other partly shielded or unshielded luminaires not exceeding 315 lumens.**
**3. Low voltage landscape lighting aimed so that glare is not visible from adjacent properties and not exceeding 525 lumens per fixture.**
**4. Shielded directional flood lighting aimed so that direct glare is not visible from adjacent properties and not exceeding 1,260 lumens.**
**5. Lighting installed with a vacancy sensor, where the sensor extinguishes the lights no more than 10 minutes after the area is vacated.**
**6. Decorative low wattage lights.**

Due to the consideration of a variance, lighting for the entire property must comply with current code requirements. The condition below allows for one year to replace noncompliant light fixtures. Various exemptions apply to residential properties for types of lighting that are typical of residential use and create relatively fewer light pollution issues if deployed correctly.

Prior to August 11, 2021, all exterior lighting shall comply with the requirements of FCC 10-37. **(Condition 7)**

---

## VI. ALTERNATIVES

1. Approve the application based on the findings of compliance with City regulations.

2. Modify the findings, reasons or conditions, and approve the request as modified.

3. Deny the application based on the Commission's findings.

4. Continue the Public Hearing to a date certain if more information is needed.

---

## VII. CONCLUSIONS AND RECOMMENDATIONS

Staff finds that the proposed application meets the requirements of City Code with the conditions as follows, and recommends approval of the application.

---

## VIII. CONDITIONS OF APPROVAL

The application, as presented, meets or can meet applicable City codes and requirements, provided that the following conditions of approval are met.

**1.** Approval for shall be shown on:

| |
|---|
| "A" Findings of Fact |
| "B" Land Use Application |
| "C" Proposed Site Plan |
| "D" Deck Plans and Elevations |
| "E" Emile Mortier Site Investigation |

Findings of Fact attached as Exhibit "A" are incorporated by reference and adopted in support of this decision. Any modifications to the approved plans or changes of use, except those changes relating to Building Codes, will require approval by the Community Development Director or Planning Commission/Design Review Board.

**2.** Regardless of the content of material presented for this Planning Commission, including application text and exhibits, staff reports, testimony and/or discussions, the applicant agrees to comply with all regulations and requirements of the Florence City Code which are current on this date, EXCEPT where variance or deviation from such regulations and requirements has been specifically approved by formal Planning Commission action as documented by the records of this decision and/or the associated Conditions of Approval. The applicant shall submit to the Community Development Department a signed "Agreement of Acceptance" of all conditions of approval prior to issuance of a building permit and apply for all building permits necessary for this proposal.

**3.** Upon encountering any cultural or historic resources during construction, the applicant shall immediately contact the State Historic Preservation Office and the Confederated Tribes of Coos, Lower Umpqua, and Siuslaw Indians. Construction shall cease immediately and shall not continue until permitted by either a SHPO or CTCLUSI representative.

**4.** The proposed deck must be built to the requirements of the Oregon State Building Code and other applicable construction and fire codes.

**5.** Construction of the proposed deck shall not expand the structure beyond the current extent of the ground-level concrete patio and the existing concrete wall along the south property line. No approval for expansion of the site's impervious surface area is included in this variance.

**6.** At the close of the appeal period, the variance shall become effective. The authorization for a variance shall be void after August 11, 2021, unless a building permit for the deck is active at that time. The variance shall be void if a building permit for the deck expires after August 11, 2021.

**7.** Prior to August 11, 2021, all exterior lighting shall comply with the requirements of FCC 10-37.

## IX. EXHIBITS

| |
|---|
| "A" Findings of Fact |
| "B" Land Use Application |
| "C" Proposed Site Plan |
| "D" Deck Plans and Elevations |
| "E" Emile Mortier Site Investigation |

*City of Florence*
Community Development Department
250 Highway 101
Florence, OR 97439
Phone: (541) 997 – 8237
Fax: (541) 997 – 4109
www.ci.florence.or.us

## Type of Request

**THIS SECTION FOR OFFICE USE ONLY**

☐ Type I ☐ Type II ☒ Type III ☐ Type IV

**Proposal:** PC 20 21 VAR 01 - 985 Alder Setback Variance

## Applicant Information

Name: Steve Oldham Phone 1: [redacted]

E-mail Address: [redacted] Phone 2: [redacted]

Address: [redacted]

Signature: steve oldham Digitally signed by steve oldham Date: 2020.06.29 10:34:34 -07'00' Date: 6/29/2020

Applicant's Representative (if any): _____

## Property Owner Information

Name: MARK AND ELIZABETH HOLDEN Phone 1: [redacted]

E-mail Address: [redacted] Phone 2: _____

Address: [redacted]

Signature: Mark D Holden Digitally signed by Mark D Holden Date: 2020.06.29 11:44:48 -07'00' Date: 6/29/2020

Applicant's Representative (if any): _____

NOTE: *If applicant and property owner are not the same individual, a signed letter of authorization from the property owner which allows the applicant to act as the agent for the property owner must be submitted to the City along with this application. The property owner agrees to allow the Planning Staff and the Planning Commission onto the property. Please inform Planning Staff if prior notification or special arrangements are necessary.*

## For Office Use Only:

| Received | Approved | Exhibit |
|---|---|---|
| RECEIVED City of Florence JUN 29 2020 By: DHH | | Exhibit B |

Form Revised 11/29/16

## Property Description

Site Address: 985 Alder St Florence Or 97439

General Description: _____

Assessor's Map No.: _ - 18122732 - _____ - _____ Tax lot(s): 18-12-27-32-05600

Zoning District: _____

Conditions & land uses within 300 feet of the proposed site that is one-acre or larger and within 100 feet of the site that is less than an acre OR add this information to the off-site conditions map (FCC 10-1-1-4-B-3): _____

## Project Description

Square feet of new: 620 Square feet of existing: 620

Hours of operation: 9:00am-5:00pm Existing parking spaces: 2

Is any project phasing anticipated? (Check One): Yes ☐ No ■

Timetable of proposed improvements: 14-21 days

Will there be impacts such as noise, dust, or outdoor storage? Yes ☐ No ■

If yes, please describe: deck removal and take away from site/ power saws hammering no heavy equipment or excavating

Proposal: (Describe the project in detail, what is being proposed, size, objectives, and what is desired by the project. Attach additional sheets as necessary)

replacing a 620 sf deck with new composite deck same size and footprint. no foundation work is necessary as it will stand on existing foundation that consists of 8" x36" concrete stem wall footing at south edge of deck and 4" monolithic slab with thickened pots @deck support posts

## For Office Use Only:

Date Submitted: 6/29/20 Fee: 1384.77

Received by: DHH

Paid 6/29/20

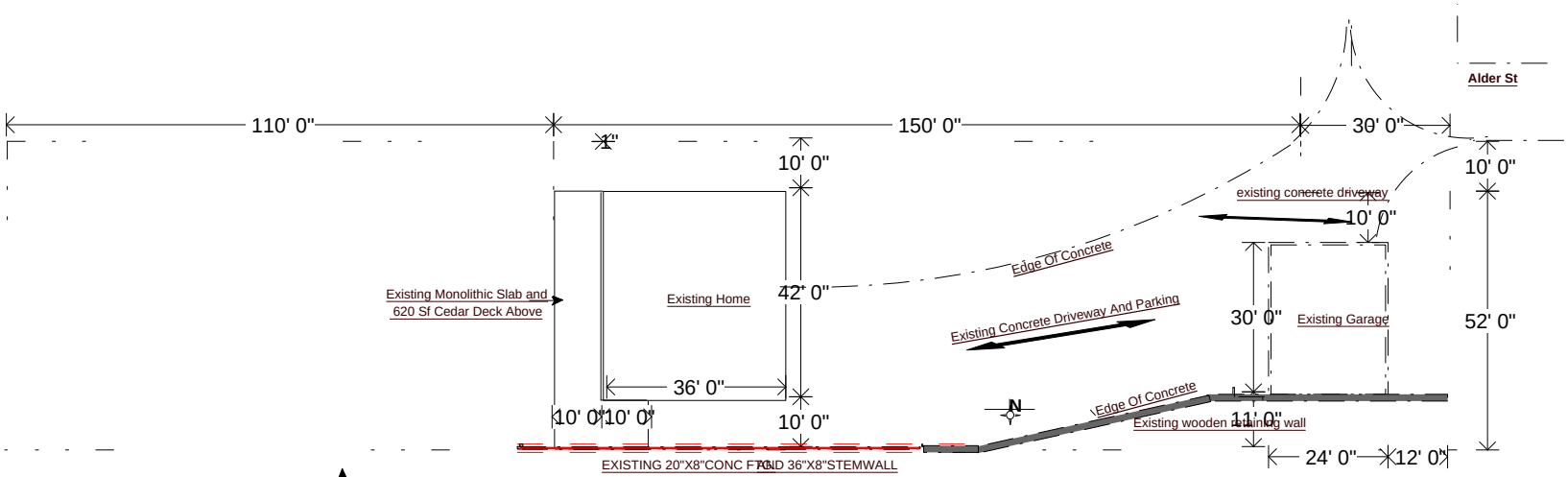


Site Plan : 985 alder st
tax lot #5600
Map# 18-12-27-23
Florence, Lane
County Or.
Date: June 27, 2020

Steve Oldham
Construction
inail4u@gmail.com
541-961-2163
Or CCB Lic# 74020

Property Owner-
Mark And Elizabeth Holden
985 Alder St
Florence Or. 97439
Phone:541-953-6660

Exhibit C

**Deck Replacement**

Steve oldham construction
inail4u@gmail.com
541-961-2163
CCB #74020

PropertyOWNERS mark elizabeth holden
address; 985 alder st florence or. 97439
map tax lot 18-12-27-32-05600

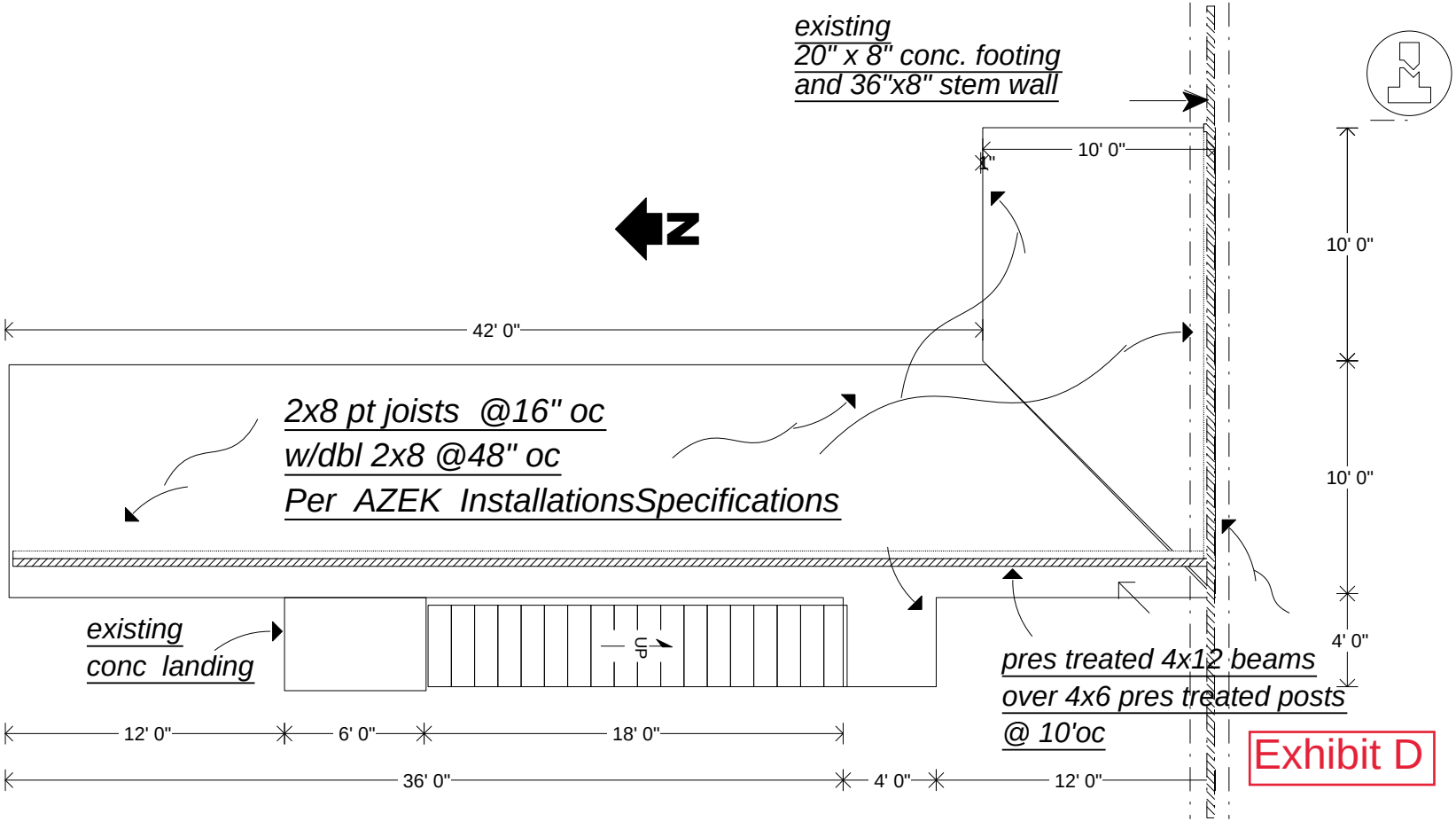


Exhibit D

*Deck Replacement*

*mark and elizabeth holden*
*986 alder st florence, or 97439*
*map tax lot# 18-12-27-32-5600*

*Steve oldham construction*
*inail4u@gmail.com*
*541-961-2163*
*CCB #74020*

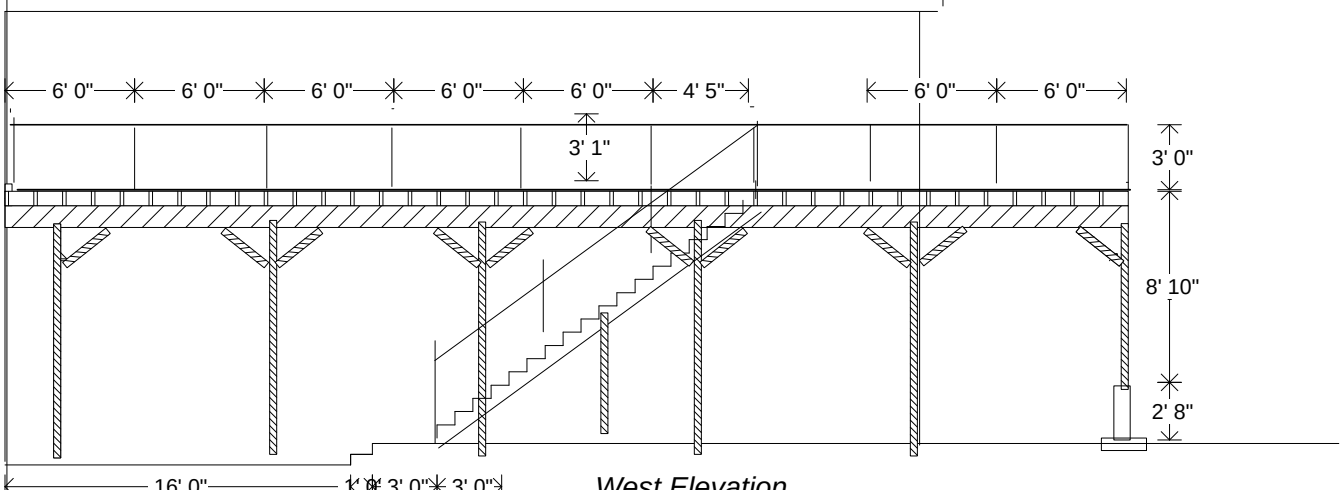


*West Elevation*

| 5 | 10 | 20 |
|---|---|---|

| | |
|---|---|
| Stece Oldham Constructoin | Property owners:Mark and elizabeth holden |
| Inail4u@Gmail.Com | property address: |
| 541-961-2163 | 985 alder st florence, or 97349 |
| Ccb Lic #74020 | map tax lot# |
| Date: June 29, 2020 | 18-12-27-32-05600 |

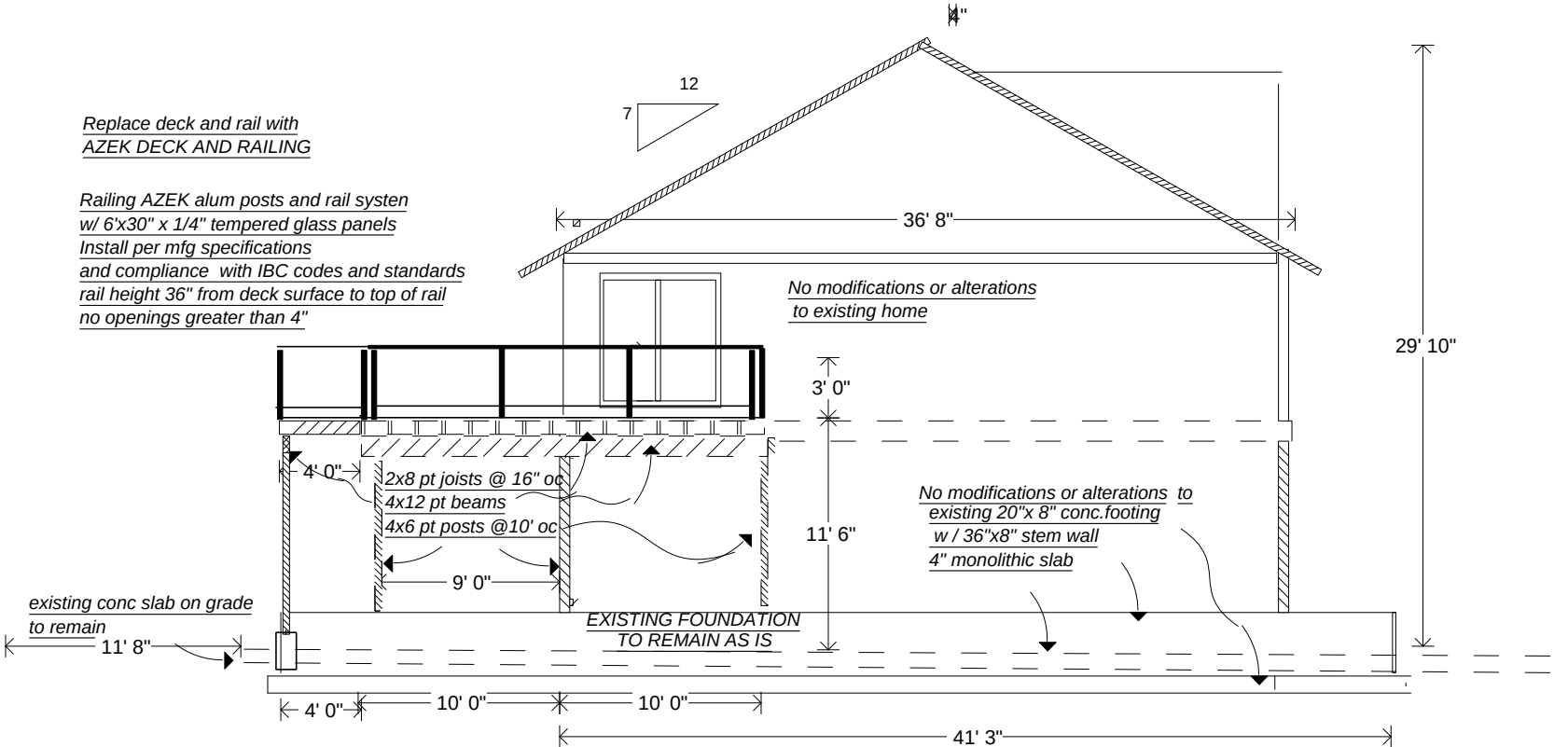


South Elevation

# EMILE MORTIER, P.E.

ENGINEER
Civil • Structural-Architectural • Fire Protection

CODE CONSULTANT
Plan Checking • Construction Inspection

P.O. Box 139
Eugene, Oregon 97440
Phone (503) 484-9080


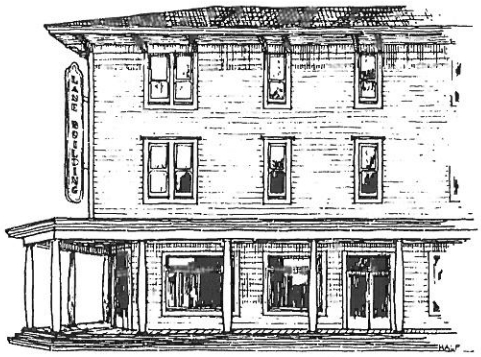

THE LANE BUILDING
474 WILLAMETTE ST.

January 5, 1989

Ron Schreiber
1195 Buff Way
Eugene, OR 97401

~~040 11th~~ ST. 985 ALDER

RE: Site Located on Assessors Map 18-12-27-3-2 Tax Lots 5600, 5700, 6700 - Alder Street, Florence, Oregon - Site Inspection W.O.#2879

As you requested, I have made a site inspection of this property on which you propose to construct a residence. During my inspection, I discussed with you, the conditions and your proposed development plans. I also discussed the conditions with Laura Gillispie, Building Official. The purpose of my inspection and this report is to respond to the special development standards of the Florence Zoning Ordinance with regard to potential problem areas. Based on my observations and information received, I make the following report and findings:

1. Site Description: The site is located adjacent to the Siuslaw River on the west, with access from Alder Street on the east. At the time of my inspection, the site had been graded basically level with some downward slope from west to east. The soils on the site are a uniform beach sand. The site has a sloped bank at the termination of the excavation at the east or river side. The crown of this bank had been removed by the excavation which is the proposed location of the homesite. No excavated or graded material was graded over the bank except for a slight exposed bank at the northwest corner adjacent to the developed homesite to the north. At the time of my inspection, you were in the process of stabilizing this bank with a railroad tie bulkhead. You stated it was your intention to plant this exposed portion with native materials. The basic grading of the site involved the placement of the excavated material to the southeast where the driveway access occurs which resulted in a steep filled bank. It is my understanding that no structures are proposed adjacent to this bank and your driveway access will be located a sufficient distance from this bank to not be affected by any slough-off or erosion. It is my understanding that you intend to stabilize this bank with native landscape materials.

2. Proposed Building Construction: The proposed residence loction was staked out on the site. It is located in the stable excavated area. The excavated soil surface should be adequate for a minimum footing bearing capacity of 2,000 PSF. The excavated bank at the adjacent property to

Exhibit E

the south presents some problem for bank stabilization. You indicated you intended to construct a bulkhead or retaining wall adjacent to this bank so that any slough-off or erosion will be retained. This adjacent property to the south is undeveloped with the surface having native vegetation.

3. River Bank Stability: My observation is that the existing sloped surface to the river bank is well stabilized. There is no exposed dune or ground surface. The existing native vegetation is being maintained. Therefore, I find no adverse condition being created by your construction. The proposed building site is located sufficiently clear of this bank to be affected by surface erosion in the excavated area. I understand the graded surfaces will be surfaced with walkways, driveways or other surface improvements or planted with vegetation in order to prevent wind or water erosion.

4. Conclusion: Based on my observations of the site condition and your proposed development plans, it is my conclusion that the conditions of the site will be stable and that the development will not create adverse conditions provided the improvements are properly installed and maintained.

I hope you find this report adequate for your purposes at this time. Please contact me if you have further questions. Thank you for this opportunity to be of service.

Very truly yours,

CIVIL-STRUCTURAL REGISTERED PROFESSIONAL ENGINEER 5162 OREGON May 8, 1984 EMILE MORTIER FIRE PROTECTION

Emile Mortier, P.E.
ECM/da

cc: Laura Gillispie, Bldg. Official
City of Florence
250 Hwy 101
Florence, OR 97439