CAPITAL STEEL INDUSTRIES, LLC

C/O Building Services Group 8321 S. SANGRE DE CRISTO RD. SUITE 302
LITTLETON, CO 80127
PHONE 800-246-9640
FAX 303-972-2614

Builder/Contractor Responsibilities

Drawing Validity- These drawings, supporting structural calculations and design certification are based on the order documents as of the date of these drawings. These documents describe the material supplied by the manufacturer as of the date of these drawings. Any changes to the order documents after the date on these drawings may void these drawings, supporting structural calculations and design certification. The Builder/Contractor is responsible for notifying the building authority of all changes to the order documents which result in changes to the drawings, supporting structural calculations and design certification.

Builder Acceptance of Drawings- Approval of the manufacturer's drawings and design data affirms that the manufacturer has correctly interpreted and applied the requirements of the order documents and constitutes Builder/Contractor acceptance of the manufacturer's interpretations of the order documents and standard product specifications, including its design, fabrication and quality criteria standards and tolerances. (AISC COSP June 2016 Section 4.4.1)

Code Official Approval - It is the responsibility of the Builder/Contractor to ensure that all project plans and specifications comply with the applicable requirements of any governing building authority. The Builder/Contractor is responsible for securing all required approvals and permits from the appropriate agency as required.

Building Erection - The Builder/Contractor is responsible for all erection of the steel and associated work in compliance with the Metal Building Manufacturers drawings. Temporary supports, such as temporary guys, braces, false work or other elements required for erection will be determined, furnished and installed by the erector (AISC COSP June 2016 Section 7.10.2).

Discrepancies - Where discrepancies exist between the Metal Building plans and plans for other trades, the Metal Building plans will govern. (AISC COSP June 2016 Section 3.3)

Materials by Others - All interface and compatibility of any materials not furnished by the manufacturer are the responsibility of and to be coordinated by the Builder/Contractor or A/E firm. Unless specific design criteria concerning any interface between materials if furnished as a part of the order documents, the manufacturers assumptions will govern.

Modification of the Metal Building from Plans - The Metal Building supplied by the manufacturer has been designed according to the Building Code and specifications and the loads shown on this drawing. Modification of the building configuration, such as removing wall panels or braces, from that shown on these plans could affect the structural integrity of the building. The Metal Building Manufacturer or a Licensed Structural Engineer should be consulted prior to making any changes to the building configuration shown on these drawings. The Metal Building Manufacturer will assume no responsibility for any loads applied to the building not indicated on these drawings.

Foundation Design - The Metal Building Manufacturer is not responsible for the design, materials and workmanship of the foundation. Anchor rod plans prepared by the manufacturer are intended to show only location, diameter and projection of the anchor rods required to attach the Metal Building System to the foundation. It is the responsibility of the end customer to ensure that adequate provisions are made for specifying rod embedment, bearing values, tie rods and or other associated items embedded in the concrete foundation, as well as foundation design for the loads imposed by the Metal Building System, other imposed loads, and the bearing capacity of the soil and other conditions of the building site. (MBMA 06 Sections 3.2.2 and A3)

Shimming - In accordance with Section 6.10 of Chapter 4 Common Industry Practices in the Metal Building Systems Manual, shimming is a normal part of erection and is not subject to claim.

Building Descriptions			
Building ID	Width	Length	Height
Building A	40'-0	80'-0	20'-0

DESIGN CRITERIA

```
Job Number ......................: 19-B-84746
Builder .........................: CAPITAL STEEL INDUSTRIES LLC-19-774
Jobsite Location ................: BULLDOG BARNS LLC (JUSTIN SHEETAW), FLORENCE, OR

Building Code ...................: 2021 Oregon Structural Specialty Code
Building Risk Category ..........: Normal (Risk Category II)
Roof Dead Load
    Superimposed ................: 2.33 psf
    Collateral ..................: 0.50 psf
    (0.50 psf Other)
Roof Live Load ..................: 20.00 psf no reduction

Snow
    Ground Snow Load (Pg) .......: 20.00 psf
    Snow Importance Factor (I) ..: 1.00
    Snow Exposure Factor (Ce) ...: 1.00
    Thermal Factor (Ct) .........: 1.00
    Sloped Roof Snow (Ps) .......: 13.00 psf
    Minimum Roof Snow Load (Pm) : 20.00 psf

Wind
    Ultimate Wind Speed (Vult) .: 130 mph
    Nominal Wind Speed (Vasd) ...: 101 mph (IBC section 1609.3.1)
    Serviceability Wind Speed ...: 70 mph
    Ground Elevation Factor .....: 1.00 (65 ft ASL)
    Wind Exposure Category ......: C
    Exposure Coefficient (KzTRCS): 0.704
    Enclosure Classification ....: Enclosed Building
    Internal Pressure Coef (GCpi): 0.18 -0.18
    Wall Loads for components not provided by building manufacturer:
    Zone 5 Area (within 8.00' of corner) : 35.73 psf pressure -47.68 psf suction
    Zone 4 Area (away from corners)      : 35.73 psf pressure -38.71 psf suction
    These values are the maximum values required based on a 10 sq ft area.
    Components with larger areas may have lower wind loads.

Seismic
    Seismic Importance Factor (Ie): 1.00
    Seismic Design Category .....: D
    Soil Site Class .............: D Stiff Soil (Default)
    Ss ..........................: 1.405 g        Sds .....: 1.124 g
    S1 ..........................: 0.736 g        Sd1 .....: 0.736 g
    Analysis Procedure ..........: Equivalent Lateral Force
    Column Line                    1 & 4     2-3       SW1 & SW2
    Basic Force Resisting System   BS        CB        BS
    Response Modification Coefficient (R): 3.25      3.50      3.25
    Seismic Response Coefficient (Cs)  : 0.346     0.321     0.346
    Design Base Shear in kips (V)      : 14.0      12.91     8.28
    Basic Structural System (Since ASCE 7-16 Table 12.2-1)
      BS - Ordinary Steel Concentrically Braced Frame
      CB - Ordinary Steel Moment Frame
```

PROJECT NOTES

Material properties of steel bar, plate, and sheet used in the fabrication of built-up structural framing members conform to ASTM A570, ASTM A572, or ASTM A1011 with 55 ksi min. yield, except flanges wider than 12" and thicker than 3/8", all flanges thicker than 1", and all webs thicker than 5/8" are 50 ksi min. yield. Rod Z-bracing conforms to ASTM A529 or ASTM A572 with 50 ksi min. yield. Cable X-bracing conforms to ASTM A475, " Strand Extra High-Strength grade. Hot rolled structural shapes conform to ASTM A992, ASTM A529, or ASTM A572 with 50 ksi min. yield. Hot rolled angles, other than flange braces, conform to ASTM A36 minimum. Round and rectangular HSS conforms to ASTM A500 Grade B. Cold-formed steel secondary framing Members conform to ASTM A1011 or ASTM A653 Grade 55 with 55 ksi min. yield. For Canada, material properties conform to CSA-G40.20/G40.21 or equivalent.

Unless otherwise noted, special inspection of fabricated items is not required. Per IBC section 1704.2.5.1, fabrication is approved to perform such work without special inspection through maintenance of IAS AC472 certification NB-13C.

Bolted joints with A325 Type 1 bolts greater than 1/2" diameter are specified as pre-tensioned joints in accordance with the most recent edition of the RCSC Specification for Structural Joints Using ASTM A325 or A490 Bolts. Pre tensioning can be accomplished by using the turn-of-nut method of tightening, calibrated wrench, twist-off-type tension-control bolts or direct-tension indicator are acceptable to the Inspecting Agency and Building Official. Installation Inspection requirements for pre-tensioned joints (Specification for Structural Joints section 9.2) using turn-of-nut method is suggested. The connections on this project are not all critical.

Design criteria as noted is as given within order documents and is applied in general accordance with the applicable provisions of the model code and or specification indicated. Neither the metal building manufacturer nor the certifying engineer declares or attests that the loads as designated are proper for local provisions that may apply or for site specific parameters. The design criteria is supplied by the builder, project owner, or an Architect and or Engineer of Record for the overall construction project.

This project is designed using manufacturer's standard serviceability criteria. Generally this means that all deflections are within typical performance limits for normal occupancy and standard metal building products.

This metal building system is designed as an enclosed building. Exterior and/or operable component, including, but not limited to, doors, windows, vents, etc. ("components") must be designed to withstand the required component and cladding wind pressures specified by the building code. In order to maintain the metal building system's enclosed building condition, all Components shall be closed when wind velocities reach half the designed wind load for the metal building system as shown on the drawings and design criteria documentation. Failure to maintain the metal building system's enclosed building condition will violate and void all warranties and certifications applicable to the material supplied by the metal building manufacturer.

The materials by the manufacturer will be fabricated in a facility that has received certification or accreditation for the Manufacture of Metal Building Systems (AISC/IAS) from International Accreditation Service (IAS). This certification is required under Section 1704 of the IBC for approved fabrication.

Raised openings, walk decks, and open areas shall be located in the bay and as shown on the erection drawings. Any cutting or removal of girts shown on the erection drawings due to the addition of raised openings, walk decks, or open areas not shown may void the design certification supplied by the metal building manufacturer.

This jobsite is located in a hurricane prone region with wind speeds of 130 mph or greater. In order to maintain the Enclosed building classification and design for wind all heavy wind [illegible] and wall mounted light transmitting panels (LTP) provided by the metal building manufacturer shall be protected by impact resistant coverings. The material may include but is not limited to 7/16 structural wood panels as prescribed by the local building code. The customer's Design Professional, not metal building manufacturer engineer, is responsible for determining the adequacy of material acting as the impact resistant covering by others and attachment to the material provided by the metal building manufacturer. This structure has not been designed to withstand the additional internal pressure implied by code as a partially enclosed condition in the absence of impact resistant coverings.

DEFLECTION CRITERIA

```
Job Number ......................: 19-B-84746
Builder .........................: CAPITAL STEEL [illegible]
Jobsite Location ................: BULLDOG BARNS [illegible], FLORENCE, OR
```

The material supplied by the manufacturer has been designed with the following minimum deflection criteria. The actual deflections may be less depending on a real load and actual member length.

BUILDING [illegible]

Roof Limits	Actual	Allowable	Ratio
Live: L/	[illegible]	240	[illegible]
Snow: L/	[illegible]	240	[illegible]
Serviceability Wind: L/	[illegible]	240	[illegible]
Total Gravity: L/	[illegible]	180	[illegible]
Total Uplift: L/	[illegible]	180	[illegible]

Wall Limits	Sidewall
Live: H/	60
Snow: H/	60
Serviceability Wind: H/	60
Seismic Drift: H/	40
Total Gravity: H/	60
Service Drift: H/	40

Wall Limits	Endwall
Total Wind Gravity: L/	60
Total Wind Girts: L/	60
Total Wind EW Columns: L/	60

The [illegible] Seismic [illegible] are shown below [illegible] at service [illegible] loads.

½" DIA. A325 BOLT GRIP TABLE	
GRIP	LENGTH
0 TO 9/16"	1 1/4" F.T.
Over 9/16" TO 1 1/16	1 3/4" F.T.
Over 1 1/16" TO 1 5/16"	2"
Over 1 5/16" TO 1 9/16"	2 1/4"
Over 1 9/16" TO 1 13/16"	2 1/2"
Over 1 13/16" TO 2 1/16"	2 3/4"
LOCATIONS OF BOLTS LONGER THAN 2 3/4" NOTED ON ERECTION DRAWINGS	
F.T. DENOTES FULLY THREADED	

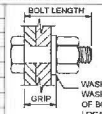

NOTE FULL THREAD ENGAGEMENT IS DEEMED TO HAVE BEEN MET WHEN THE END OF THE BOLT IS FLUSH WITH THE FACE OF THE NUT.

WASHER REQUIRED ONLY WHEN SPECIFIED. WASHER MAY BE LOCATED UNDER HEAD OF BOLT, UNDER NUT, OR AT BOTH AT LOCATIONS NOTED ON ERECTION DRAWINGS. ADD 50/2" FOR EACH WASHER TO MATERIAL THICKNESS TO DETERMINE GRIP.

Download panel installation manuals from:
www.CBBmanuals.com

Descargue los manuales de instalación del panel desde:
www.CBBmanuals.com

Drawing Index

Page	Description
F1	Anchor Rod Setting Plan
F2	Anchor Rod Details
F3	Reactions
E1	Cover Sheet
E2	Primary Steel
E3	Roof Framing
E4	Roof Sheeting RPA & RPC
E5	Sidewall Framing Sheeting SWA
E6	Sidewall Framing Sheeting SWC
E7	Endwall Framing Sheeting EWB
E8	Endwall Framing Sheeting EWD
E9	Cross Section at Frame Line 2
E10	Cross Section at Frame Line 3
E11	Connection Detail
R1-R3	Erection Guides
R4-R13	Construction Drawings

Revision	Date	Description	By	Ck'd

CAPITAL STEEL INDUSTRIES, LLC
C/O Building Services Group 8321 S. SANGRE DE CRISTO RD. SUITE 302
PHONE 800-246-9640
FAX 303-972-2614

Customer: CAPITAL STEEL INDUSTRIES LLC
8321 S. SANGRE DE CRISTO RD.
LITTLETON, CO 80127-4208

Project Name & Location: BULLDOG BARNS LLC
8170 SHORELINE DR
FLORENCE, OR 97439-9508

Drawing Status: ☐ Issued For Approval (Not For Construction) ☐ Issued For Permit ☒ Issued For Construction

Scale:	NOT TO SCALE
Drawn by:	YMC 2/21/25
Checked by:	CBC 2/25/25
Project Engineer:	EOL
Job Number:	19-B-84746
Sheet Number:	E1 of 11

The engineer whose seal appears hereon is employed by or is contracted to provide engineering services for the manufacturer, Cornerstone Building Brands or one of its affiliates, for the materials described hereon. Said seal or certification is limited to the products designed and manufactured by manufacturer only. The undersigned engineer is not the overall engineer of record for this project.

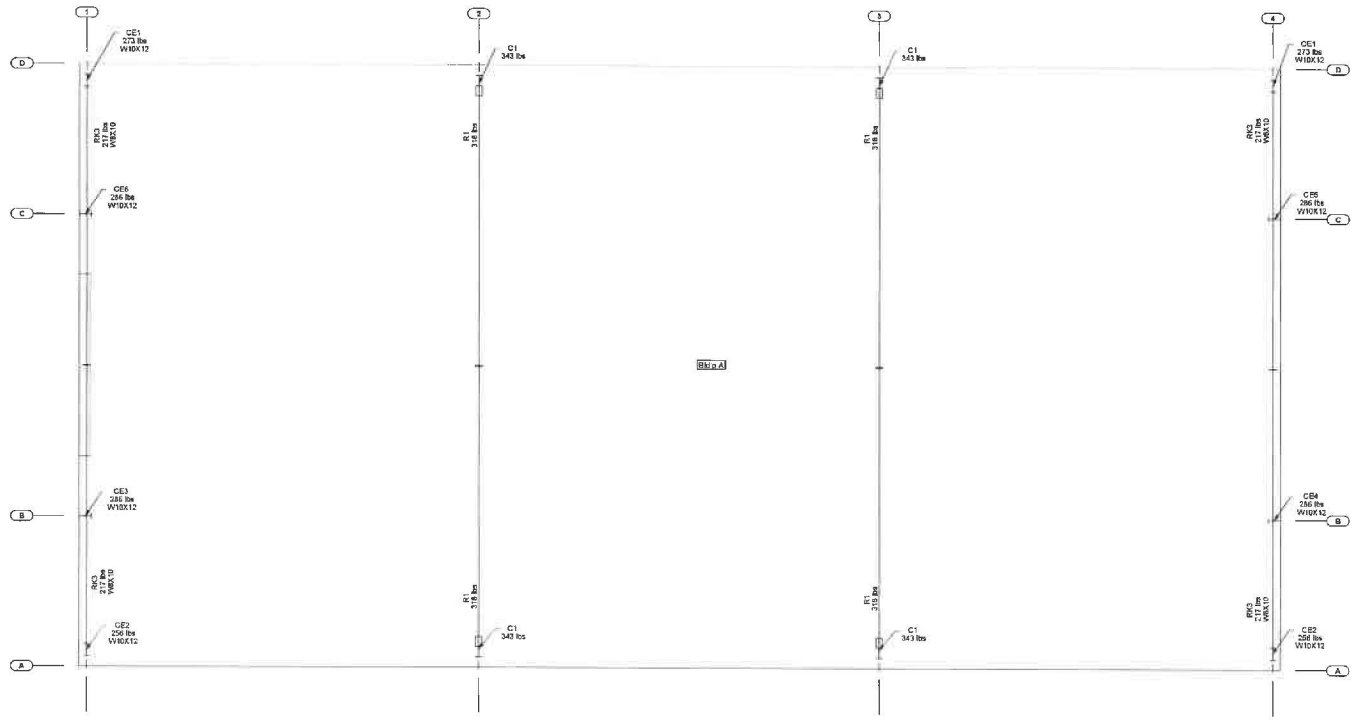

Primary Steel

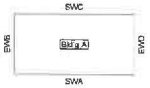

Key Plan

Revision	Date	Description	By	Ck'd

CAPITAL STEEL INDUSTRIES, LLC
CTS Building Services Group 8331 S. SANDRE DE CRISTO RD SUITE 302
LITTLETON, CO 80120
PHONE: 800-248-8640
FAX: 303-972-5241

Customer:
CAPITAL STEEL INDUSTRIES LLC
8331 S. SANDRE DE CRISTO
LITTLETON, CO 80120-4208

Project Name & Location:
BULLDOG BARNS LLC
3700 OLD HWY 115
FLORENCE, OR 97439-9508

Drawing Status:
☐ Issued For Approval (Not For Construction)
☐ Issued For Permit
☒ Issued For Construction

Scale:	NOT TO SCALE	
Drawn By:	YMC	2/21/25
Checked By:	CBC	2/25/25
Project Engineer:	EOL	
Job Number:	19-B-84746	
Sheet Number:	E2 of 11	

The engineer whose seal appears hereon is employed by or is contracted to provide engineering services for the manufacturer, Cornerstone Building Brands or one of its affiliates, for the materials described herein. Said seal or certification is limited to the products designed and manufactured by manufacturer only. The undersigned engineer is not the overall engineer of record for this project.

● — DENOTES CLIP LOCATION
SC90 AT 6" PURLINS
SC92 AT 10" PURLINS
SC94 AT 12" PURLINS

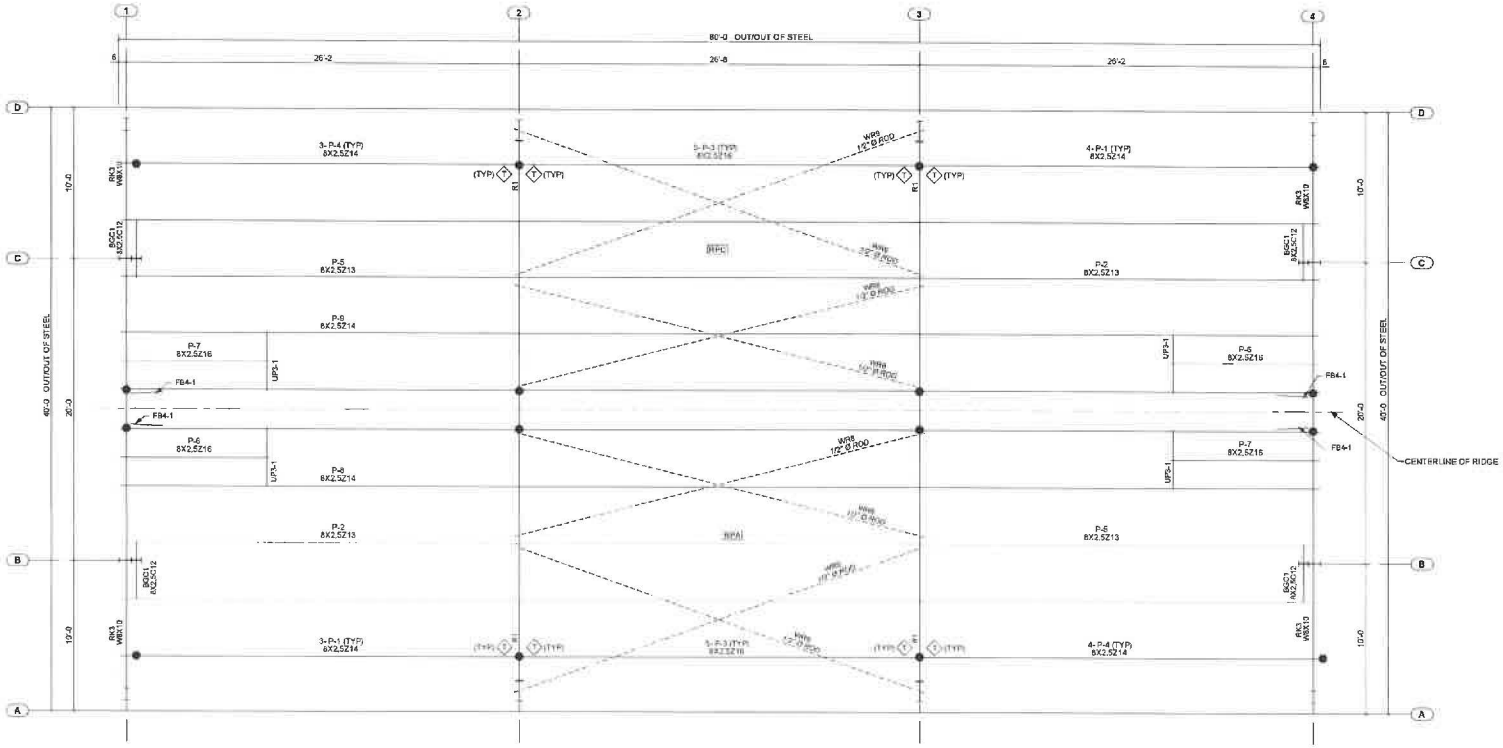

ZEE SECTION LAP TABLE			
SYMBOL	LAP LENGTH	SYMBOL	LAP LENGTH
Q	4'-0 1/4"	T	2'-5 3/4"
S	0'-3 3/4"	V	3'-1 3/4"
K	1'-5 3/4"		REFER TO CF01122

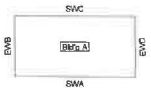

Key Plan

Roof Framing

Revision	Date	Description	By	Ck'd

CAPITAL STEEL INDUSTRIES, LLC
Corporate Headquarters 1325 S. Sheridan St. Denver, CO 80232
Office 303-922-5840
Fax 303-922-5848

Customer: CAPITAL STEEL INDUSTRIES LLC
1081 BRADFORD RD
LITTLETON,CO 80127-4208

Project Name & Location: FLORENCE RIDGE LLC
3120 HIGHWAY 101
FLORENCE,OR 97439-9508

Drawing Status: ☐ Issued For Approval (Not For Construction) ☐ Issued For Permit ☒ Issued For Construction

Scale:	NOT TO SCALE
Drawn by:	YMC 2/21/25
Checked by:	CBC 2/25/25
Project Engineer:	EOL
Job Number:	19-B-84746
Sheet Number:	E3 of 11

The engineer whose seal appears hereon is employed by or is contracted to provide engineering services for the manufacturer, Cornerstone Building Brands or one of its affiliates, for the materials described herein. Said seal or certification is limited to the products designed and manufactured by manufacturer only. The undersigned engineer is not the overall engineer of record for this project.

PBR ROOF PANELS ARE TO BE FIELD CUT IF THE PANELS EXTEND OUTSIDE OF THE ROOF PLANE. PANELS ARE NOT TO BE BACK LAPPED.

Non-Standard PBR Roof Panel Fasteners

PSR member fasteners are to be used for purlin to secondary attachment in lieu of #3 shown on the R Drawings

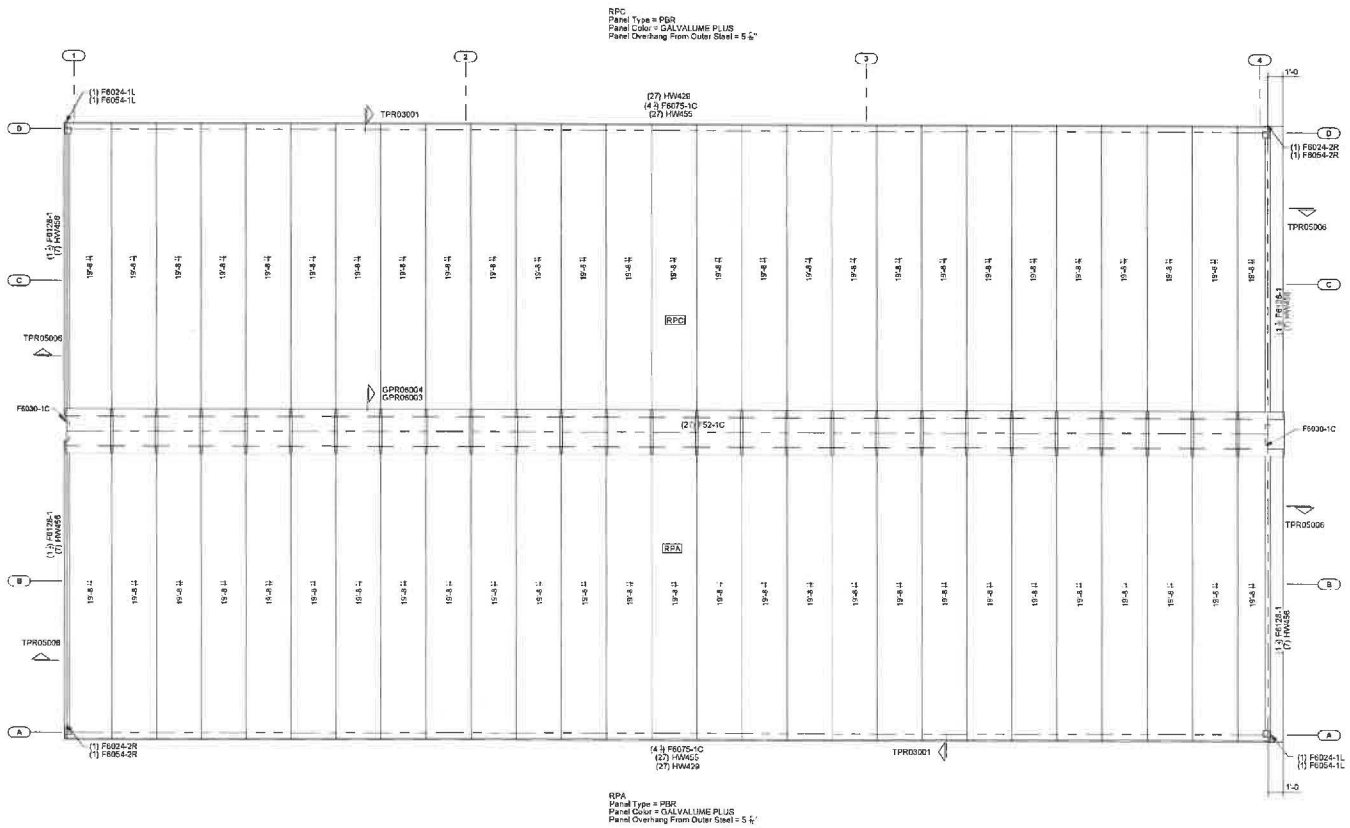

Roof Sheeting RPA & RPC

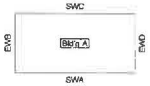

Key Plan

Revision	Date	Description	By	Ck'd

CAPITAL STEEL INDUSTRIES, LLC
CONSTRUCTION SERVICES
3 HILL DR., CO 80027
PHONE: 303-972-9644
FAX 303-972-2844
1422 S. SAUNDERS, CONG. CO. SUITE 302

Customer:
CAPITAL STEEL INDUSTRIES LLC
10639 BRADFORD RD
LITTLETON,CO 80127-4208

Project Name & Location:
PLUMS CAFE LLC
3120 HIGHWAY 101
FLORENCE,OR 97439-9508

Drawing Status:
☐ Issued For Approval (Not For Construction)
☐ Issued For Permit
☒ Issued For Construction

Scale: NOT TO SCALE
Drawn by: YMC 2/21/25
Checked by: CBC 2/25/25
Project Engineer: EOL
Job Number: 19-B-84746
Sheet Number: E4 of 11

The engineer whose seal appears hereon is employed by or is contracted to provide engineering services for the manufacturer, Cornerstone Building Brands or one of its affiliates, for the materials described herein. Said seal or certification is limited to the products designed and manufactured by manufacturer only. The undersigned engineer is not the overall engineer of record for this project.

▲ – DENOTES (4) 1/2"Ø BOLTS AT PURLIN OR GIRT CONNECTION TO CLIP, REFER TO CF01122

Non-Standard PBR Wall Panel Fasteners

#12B member fasteners are to be used for panel to secondary attachment in lieu of #12A shown on the R Drawings

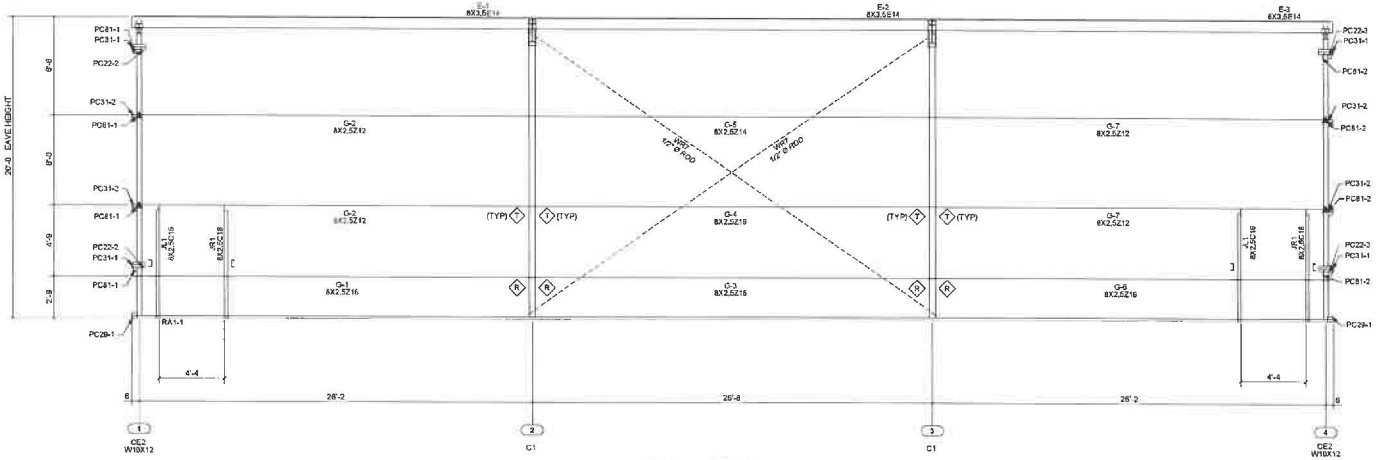

Sidewall Framing SWA at Grid Line A

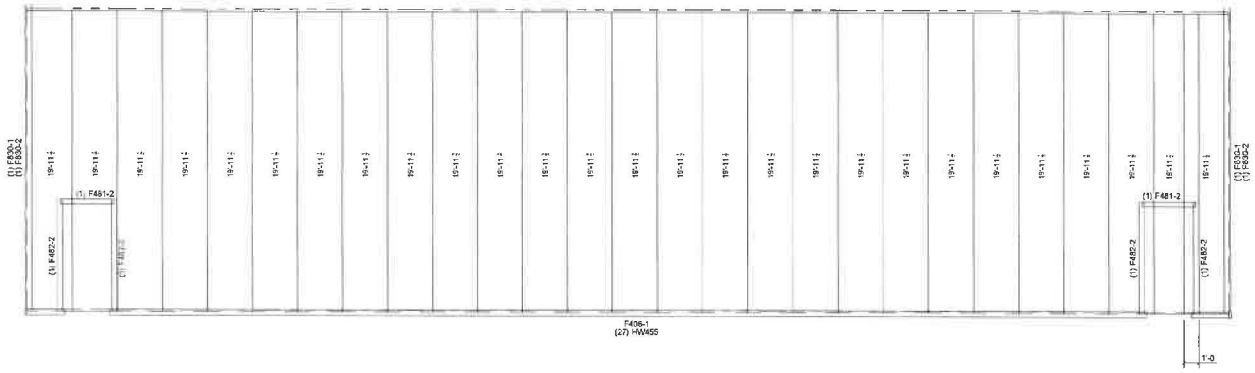

PBR Wall Panels
Panel Coverage = 3'-0"
Panel Color = S200 CHARCOAL GRAY
Panel Pkg. Reqd. = PBS-3
Field Cut Panel and Trim as required per Construction Details

Sidewall Sheeting SWA

Key Plan

ZEE SECTION LAP TASLE			
SYMBOL	LAP LENGTH	SYMBOL	LAP LENGTH
Q	-9'-0 1/4"	T	2'-6 3/4"
S	0'-3 3/4"	V	3'-1 3/4"
R	1'-5 3/4"	REFER TO CF01122	

Revision	Date	Description	By	Ck'd

CAPITAL STEEL INDUSTRIES, LLC
CTS Buildings Group 8301 S. SANDIS DE CRISTO RD. SUITE 302
Contact: Jim Spencer
PHONE: 800-248-3840
FAX: 303-972-3844

Customer: CAPITAL STEEL INDUSTRIES LLC
1000 WEST MAYSTA AVE
LITTLETON, CO 80120-4208

Project Name & Location:
BULLDOG BARNS, LLC
3100 SOUTH HWY 101
FLORENCE, OR 97439-9508

Drawing Status:
☐ Issued For Approval (Not For Construction)
☐ Issued For Permit
☒ Issued For Construction

Scale:	NOT TO SCALE
Drawn by:	YMC 2/21/25
Checked by:	CRC 2/25/25
Project Engineer:	EOL
Job Number:	19-B-84746
Sheet Number:	E5 of 11

The engineer whose seal appears hereon is employed by or is contracted to provide engineering services for the manufacturer, Cornerstone Building Brands or one of its affiliates, for the materials described hereon. Said seal or certification is limited to the products designed and manufactured by manufacturer only. The underdesigned engineer is not the overall engineer of record for this project.

▲ – DENOTES (4) 1/2"Ø BOLTS AT PURLIN OR GIRT CONNECTION TO CLIP. REFER TO CF01122

Non-Standard PBR Wall Panel Fasteners

#17B member fasteners are to be used for panel to secondary attachment in lieu of #17A shown on the R Drawings

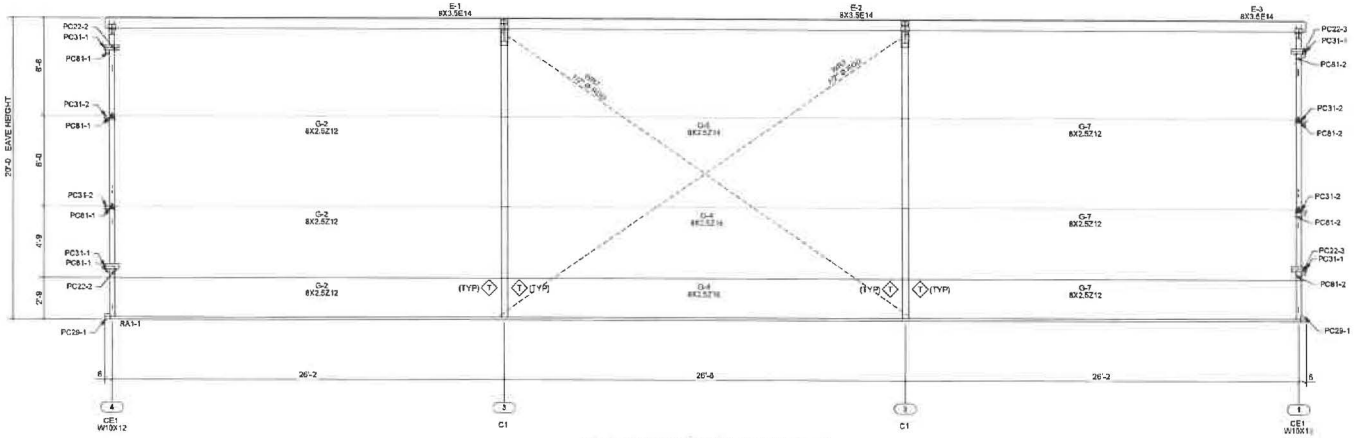

Sidewall Framing SWC at Grid Line D

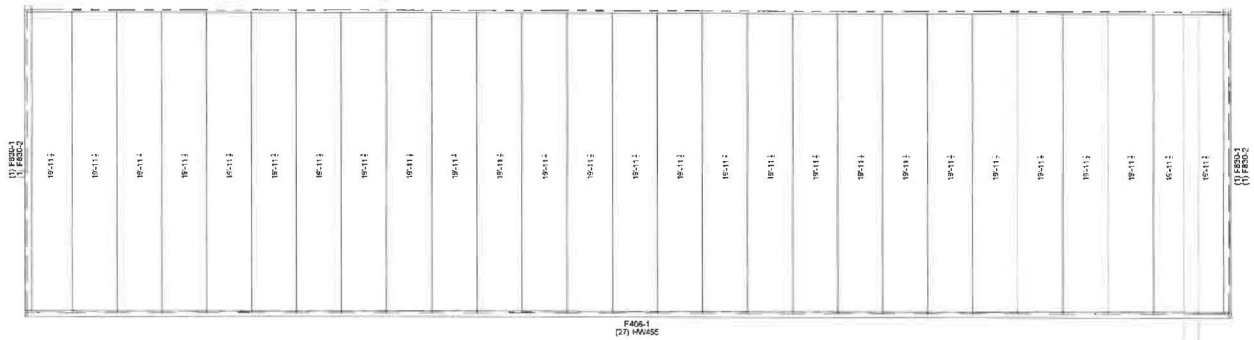

PBR Wall Panels
Panel Coverage = 3'-0"
Panel Color = 5260 CHARCOAL GRAY
Panel Pkg. Req'd. = PBS-4
Field Cut Panel and Trim as required per Construction Details

Sidewall Sheeting SWC

Key Plan

ZEE SECTION LAP TABLE			
SYMBOL	LAP LENGTH	SYMBOL	LAP LENGTH
G	4'-0 1/4"	T	2'-5 3/4"
S	0'-3 3/4"	V	3'-1 3/4"
N	1'-5 3/4"	REFER TO CF01122	

Revision	Date	Description	By	Ck'd

CAPITAL STEEL INDUSTRIES, LLC
C/O BUILDING SYSTEMS
3 PIERCE PLACE, SUITE 1000
STAFFORD, TX 77477
5231 S. SHORE DR. EUGENE, OR - SUITE 302
PHONE 541-345-0140
FAX 503-972-3614

Customer:
CAPITAL STEEL INDUSTRIES LLC
10636 BRADFORD RD
LITTLETON,CO 80127-4208

Project Name & Location:
BULLDOG BARNS LLC
3120 HIGHWAY 101
FLORENCE,OR 97439-9503

Drawing Status:
☐ Issued For Approval (Not For Construction)
☐ Issued For Permit
☒ Issued For Construction

Scale:	NOT TO SCALE
Drawn by:	YMC 2/21/25
Checked by:	CBC 2/25/25
Project Engineer:	EOL
Job Number:	19-B-84746
Sheet Number:	E6 of 11

The engineer whose seal appears herein is employed by or is contracted to provide engineering services for the manufacturer, Cornerstone Building Brands or one of its affiliates, for the materials described herein. Said seal or certification is limited to the products designed and manufactured by manufacturer only. The undersigned engineer is not the overall engineer of record for this project.

Non-Standard PBR Wall Panel Fasteners

#12B member fasteners are to be used for panel to secondary attachment in lieu of #12A shown on the R Drawings.

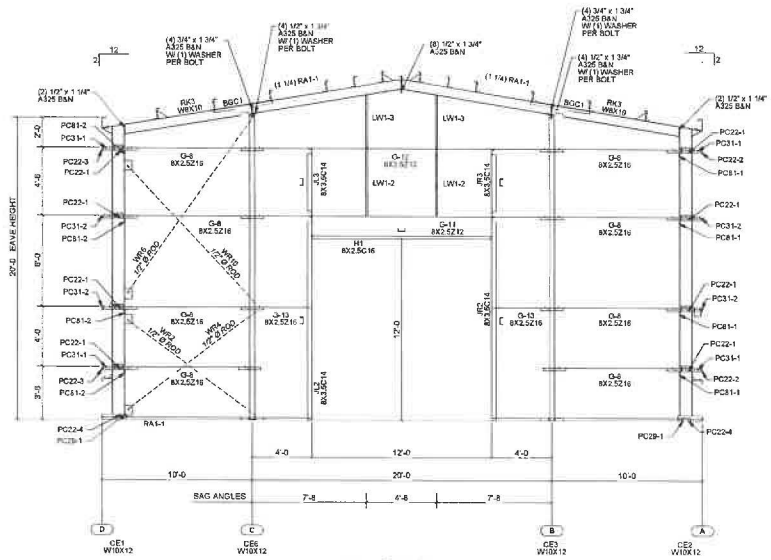

Endwall Framing EWB at Grid Line 1

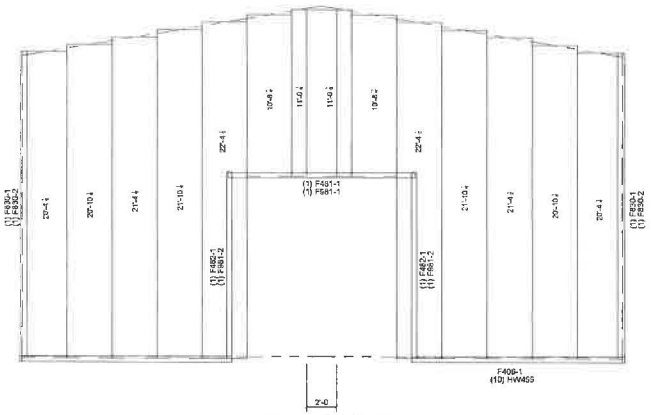

PBR Wall Panels
Panel Coverage = 3'-0"
Panel Color = S200 CHARCOAL GRAY
Panel Pltg. Req'd. = PBS-1
Field Cut Panel and Trim as required per Construction Details

Endwall Sheeting EWB

Key Plan

Revision	Date	Description	By	Ck'd

CAPITAL STEEL INDUSTRIES, LLC
CONSTRUCTION SYSTEMS
3175 S. SANDERS DR, CYSTO RD, SUITE 302
JTLETON, CO 80127
Phone: 303-972-8040
Fax: 303-972-8034

Customer: CAPITAL STEEL INDUSTRIES LLC
ADDRESS: 1 BRADFORD RD
JTTLETON,CO 80127-4208

Project Name & Location:
BUILDING PARKS LLC
1 BRADFORD RD
FLORENCE,OR 97439-9508

Drawing Status: ☐ Issued For Approval (Not For Construction) ☐ Issued For Permit ☒ Issued For Construction

Scale: NOT TO SCALE
Drawn by: YMC 2/21/25
Checked by: CBC 2/25/25
Project Engineer: EOL
Job Number: 19-B-84746
Sheet Number: E7 of 11

The engineer whose seal appears hereon is employed by or is contracted to provide engineering services for the manufacturer, Cornerstone Building Brands or one of its affiliates, for the materials described herein. Said seal or certification is limited to the products designed and manufactured by manufacturer only. The undersigned engineer is not the overall engineer of record for this project.

Non-Standard PBR Wall Panel Fasteners

#70 member fasteners are to be used for panel to secondary attachment in lieu of #17A shown on the R Drawings

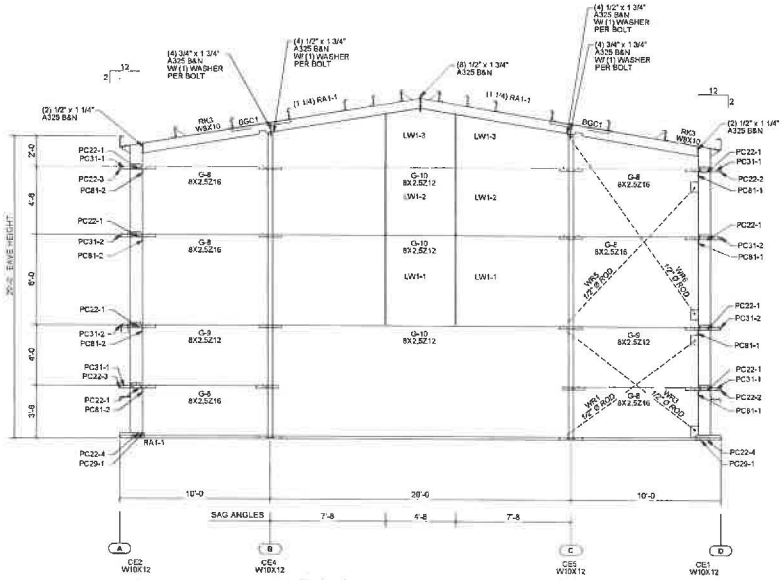

Endwall Framing EWD at Grid Line 4

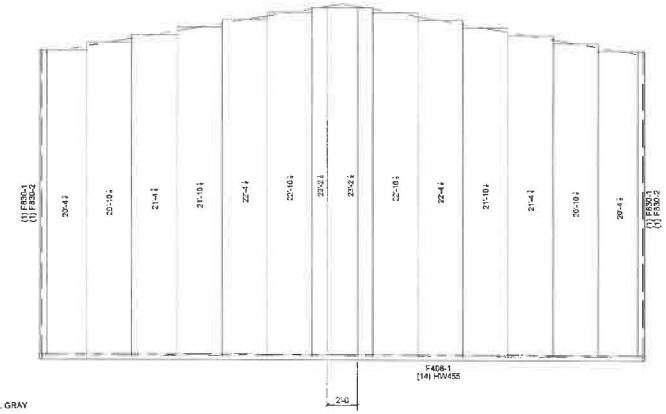

PBR Wall Panels:
Panel Coverage = 3'-0"
Panel Color = S200 CHARCOAL GRAY
Panel Pkg. Req'd. = PBS-2
Field Cut Panel and Trim as required per Construction Details

Endwall Sheeting EWD

Key Plan

Revision	Date	Description	By	Ck'd

CAPITAL STEEL INDUSTRIES, LLC
COLORADO SPRINGS Branch 6231 S. SANDRE ST. CHERRY RD. SUITE 302
STRATHM, Co 80237
PHONE: 303-373-9010
FAX: 303-972-3814

Customer:
CAPITAL STEEL INDUSTRIES LLC
10639 BRADFORD RD
LITTLETON,CO 80127-4208

Project Name & Location:
BUILDS BRANDS LLC
5120 HIGHWAY 101
FLORENCE,OR 97439-9508

Drawing Status:
☐ Issued For Approval (Not For Construction)
☐ Issued For Permit
☒ Issued For Construction

Scale:	NOT TO SCALE
Drawn by:	YMC 2/21/25
Checked by:	CBC 2/25/25
Project Engineer:	EOL
Job Number:	19-B-84746
Sheet Number:	E8 of 11

The engineer whose seal appears hereon is employed by or is contracted to provide engineering services for the manufacturer, Cornerstone Building Brands or one of its affiliates, for the materials described herein. Said seal or certification is limited to the products designed and manufactured by manufacturer only. The undersigned engineer is not the overall engineer of record for this project.

Active\Eng\19-B-84746\wir01-eclipse\BLDG-A\Drtgs\01L (02/11/25 09:14:24)

GENERAL NOTES
FRAME CLEARANCES SHOWN ARE APPROXIMATE AND MAY VARY DUE TO CONDITIONS (DEFLECTION).

VERTICAL CLEARANCE DIMENSIONS ARE FROM FINISHED FLOOR REFERENCE ELEVATION.

APPROXIMATE MEMBER WEIGHTS	
PART MARK	WEIGHT
R1	317
C1	343

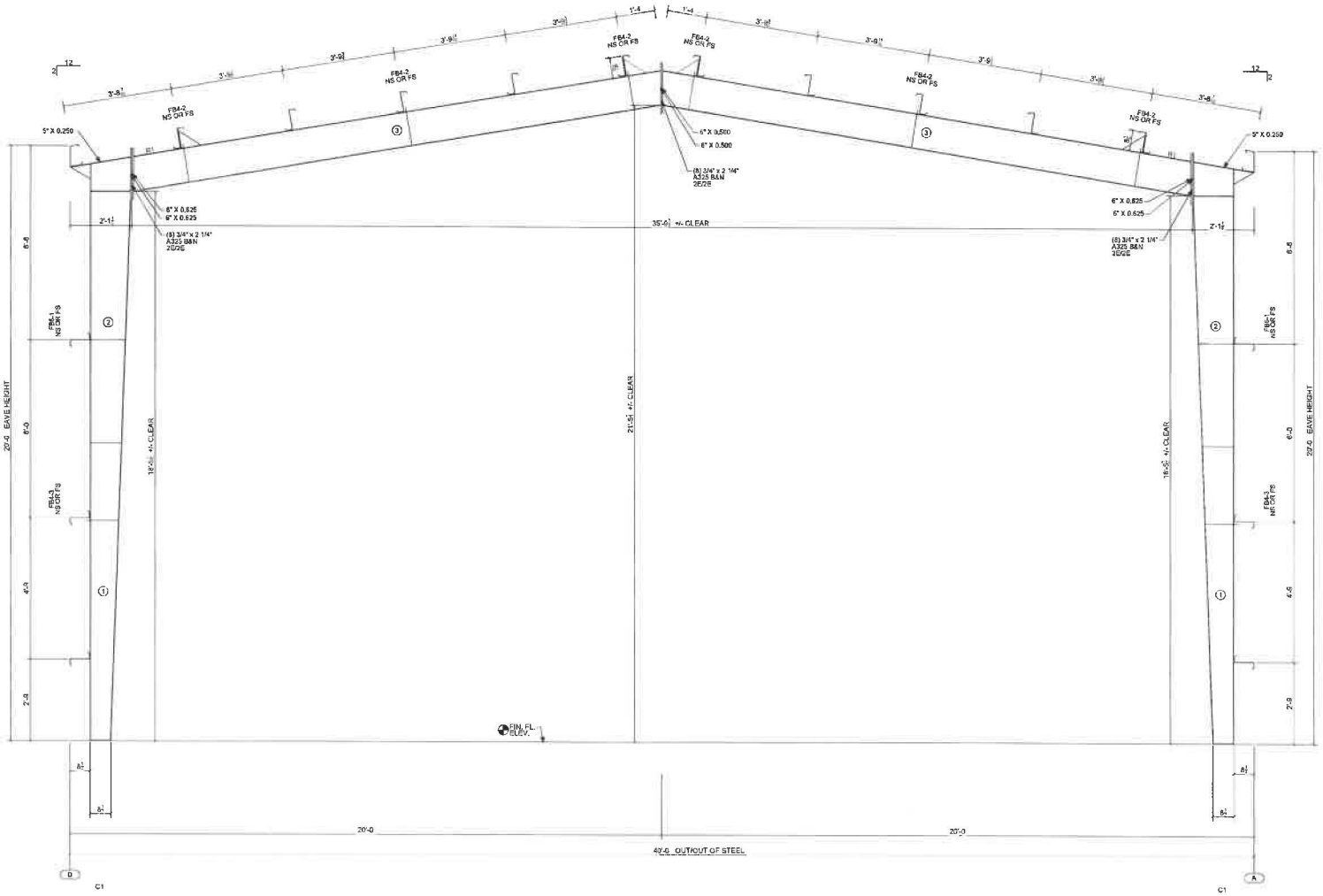

Cross Section at Frame Line 2

PRIMARY BUILT-UP MEMBER SIZES							
MARK	OUTSIDE FLG THICK	OUTSIDE FLG WIDTH	INSIDE FLG THICK	INSIDE FLG WIDTH	WEB THICK	WEB START DEPTH	WEB END DEPTH
1	0.2500	5"	0.2500	5"	0.1349	8.0000	12.4111
2	0.2500	5"	0.2500	5"	0.1858	12.4111	18.0000
3	0.2500	5"	0.2500	5"	0.1349	13.5000	13.5000

Revision	Date	Description	By	C'd

CAPITAL STEEL INDUSTRIES, LLC
C/O Butler's Series
PO Box 1000 Dept. 8231 S. SANDRE DE CRISTO RD. SUITE 320
PHONE: 800-248-8840
FAX: 303-777-3481

Customer: CAPITAL STEEL INDUSTRIES LLC
1000 W. BERRY ROAD
LITTLETON, CO 80127-4208

Project Name & Location: BULLOOG BARNS LLC
1300 CHAMBERS ST.
LORENZEL, OR 97439-9508

Drawing Status: ☐ Issued For Approval (Not For Construction) ☐ Issued For Permit ☒ Issued For Construction

Scale:	NOT TO SCALE
Drawn by:	YMC 2/21/25
Checked by:	CBC 2/25/25
Project Engineer:	EOL
Job Number:	19-B-84746
Sheet Number:	E9 of 11

The engineer whose seal appears hereon is employed by or is contracted to provide engineering services for the manufacturer, Cornerstone Building Brands or one of its affiliates, for the materials described herein. Said seal or certification is limited to the product is designed and manufactured by manufacturer only. The undersigned engineer is not the overall engineer of record for this project.

Active\Eng\19-B-84746\ver01-eclipse\BLDG-A\Drtgs\01L (02/11/25 09:14:24)

GENERAL NOTES
FRAME CLEARANCES SHOWN ARE APPROXIMATE AND MAY VARY DUE TO CONDITIONS (DEFLECTION).

VERTICAL CLEARANCE DIMENSIONS ARE FROM FINISHED FLOOR REFERENCE ELEVATION.

APPROXIMATE MEMBER WEIGHTS	
PART MARK	WEIGHT
R1	317
C1	343

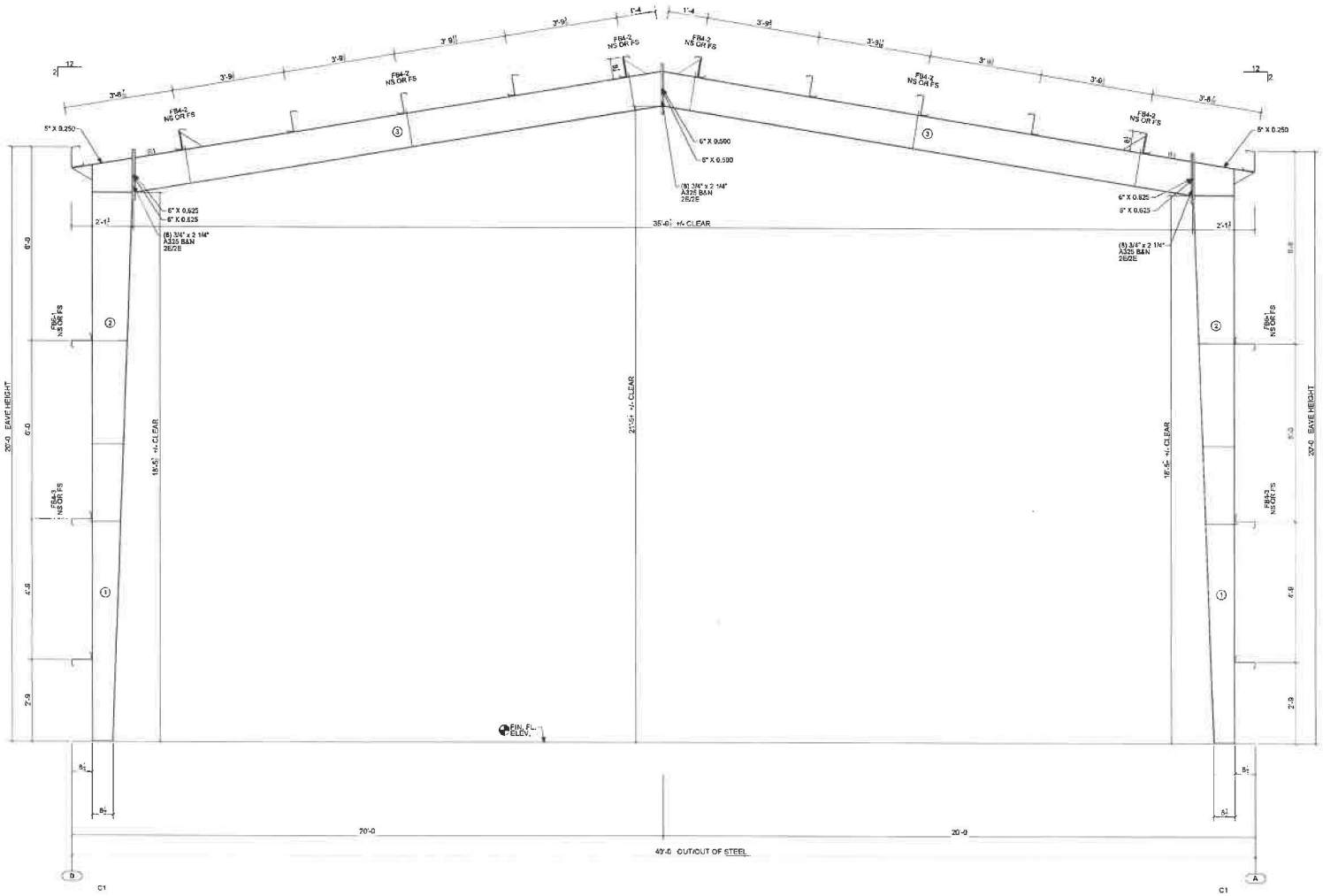

Cross Section at Frame Line 3

PRIMARY BUILT-UP MEMBER SIZES								
MARK	OUTSIDE FLG THICK	OUTSIDE FLG WIDTH	INSIDE FLG THICK	INSIDE FLG WIDTH	WEB THICK	WEB START DEPTH	WEB END DEPTH
1	0.2500	5"	0.2500	5"	0.1340	8.0000	12.4111
2	0.2500	5"	0.2500	5"	0.1850	12.4111	18.0000
3	0.2500	5"	0.2500	5"	0.1340	13.5000	13.5000

Revision	Date	Description	By	Ck'd

CAPITAL STEEL INDUSTRIES, LLC
C/O BUILding Systems Group 8321 S. SANDRE DE CRISTO RD. SUITE 302
LITTLETON, CO 80127
PHONE 800-248-9810
FAX 303-512-2815

Customer: CAPITAL STEEL INDUSTRIES LLC
10639 BRADFORD RD
LITTLETON, CO 80127 - 4208

Project Name & Location:
BULLDOG BARNS LLC
3126 HIGHWAY 101
FLORENCE, OR 97439 - 9508

Drawing Status:
☐ Issued For Approval (Not For Construction)
☐ Issued For Permit
☒ Issued For Construction

Scale:	NOT TO SCALE
Drawn by:	YMC 2/21/25
Checked by:	CBC 2/25/25
Project Engineer:	EOL
Job Number:	19-B-84746
Sheet Number:	E10 of 11

The engineer whose seal appears hereon is employed by or is contracted to provide engineering services for the manufacturer, Cornerstone Building Brands or one of its affiliates, for the materials described herein. Said seal or certification is limited to the products designed and manufactured by manufacturer only. The undersigned engineer is not the overall engineer of record for this project.

CONNECTION CODES
(FOR TOP AND BOTTOM BOLT PATTERN)

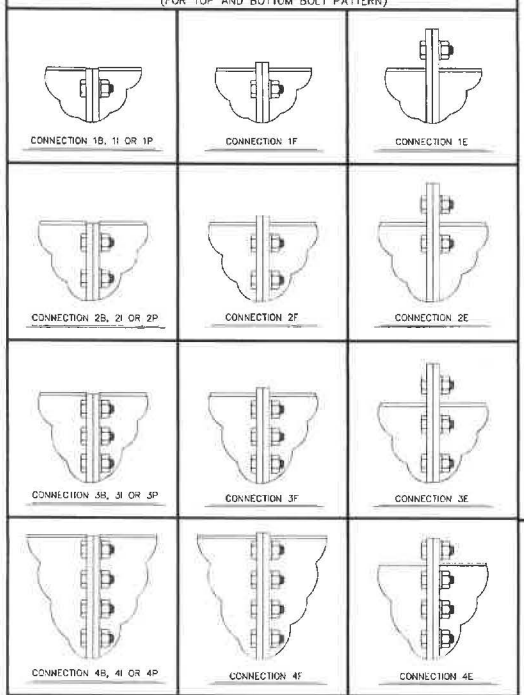

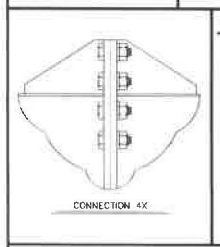

4 E /2 E H
- CONNECTION DESIGNATION
- BLANK = STANDARD CONNECTION
- H = HEAVY CONNECTION
- BOTTOM CONNECTION CODE
- BOTTOM QUANTITY OF BOLT ROWS
- CONNECTION DESIGNATION
- BLANK = STANDARD CONNECTION
- H = HEAVY CONNECTION
- TOP CONNECTION CODE
- TOP QUANTITY OF BOLT ROWS

CONNECTION CODE FORMAT

CONNECTION CODE DESCRIPTION

B = THIS DESCRIPTION CODE IS USED TO DEFINE SHEAR CONNECTIONS. BOLTS ARE LOCATED INSIDE THE TOP FLANGE AND CONNECTION PLATE IS RECESSED 1/8" BELOW THE TOP FLANGE. CONNECTION PLATE LENGTH MUST BE A MINIMUM OF HALF THE RAFTER WEB DEPTH AND SHALL NOT EXCEED THE RAFTER TOTAL DEPTH.

E = THIS DESCRIPTION CODE IS USED TO DEFINE MOMENT CONNECTIONS. BOLTS ARE LOCATED WITH ONE SET OUTSIDE THE TOP OR BOTTOM FLANGE AND THE REMAINING SETS ARE LOCATED INSIDE THE TOP OR BOTTOM FLANGE.

F = THIS DESCRIPTION CODE IS USED TO DEFINE MOMENT CONNECTIONS. BOLTS ARE LOCATED INSIDE THE TOP OR BOTTOM FLANGE AND CONNECTION PLATE PROJECTS 1/2" BEYOND THE TOP OR BOTTOM FLANGE.

I = THIS DESCRIPTION CODE IS USED TO DEFINE MOMENT CONNECTIONS. BOLTS ARE LOCATED INSIDE THE TOP OR BOTTOM FLANGE AND CONNECTION PLATE IS RECESSED 1/8" BELOW THE TOP OR BOTTOM FLANGE.

P = THIS DESCRIPTION CODE IS USED TO DEFINE SHEAR CONNECTIONS. BOLTS ARE LOCATED INSIDE THE TOP FLANGE AND CONNECTION PLATE IS RECESSED 1/8" BELOW THE TOP FLANGE. CONNECTION PLATE LENGTH MUST BE A MINIMUM OF HALF THE RAFTER WEB DEPTH AND SHALL NOT EXCEED THE RAFTER TOTAL DEPTH.

4X = THIS DESCRIPTION CODE IS USED TO DEFINE MOMENT CONNECTIONS. BOLTS ARE LOCATED WITH TWO SETS EACH SIDE OF THE TOP OR BOTTOM FLANGE WITH A GUSSET PLATE OUTSIDE THE TOP AND BOTTOM FLANGE OR COLUMN CAP PLATE.

CONNECTION BOLT DATA

NAME	DESCRIPTION FOR A325 BOLT DIMENSIONS	A325 CONNECTION BOLT DIMENSIONS					
D	DIAMETER OF THE BOLT	1/2"	3/4"	7/8"	1"	1 1/4"	1 1/2"
HD	BOLT HOLE DIAMETER	9/16"	13/16"	15/16"	1 1/16"	1 5/16"	1 9/16"
G	BOLT GAUGE	2 1/2"	3"	4"	3 1/2"	4"	5 1/2"
	MAX. WEB THICKNESS (Max. 5/16" Fillet Weld) WITHOUT WASHER	1"	1 1/8"	1 7/8"	1 1/4"	1 3/8"	2 1/8"
	MAX. WEB THICKNESS (Max. 5/16" Fillet Weld) WITH WASHER	3/4"	7/8"	1 5/8"	7/8"	7/8"	1 7/8"
HG	HEAVY CONN. BOLT GAUGE	N/A	2 1/4"	2 5/8"	3"	3 3/4"	4"
S	NORMAL BOLT SPACING	2 1/2"	3"	3 1/4"	3 1/2"	4"	4 1/2"
BSMIN	MINIMUM SPACING BETWEEN TOP & BOTTOM SETS OF BOLTS	1 1/2"	2 1/4"	2 5/8"	3"	3 3/4"	4"
BSMAX	MAXIMUM BOLT SPACING BETWEEN TOP AND BOTTOM SETS OF BOLTS ON CONNECTION PLATES	2'-0"	2'-0"	2'-0"	2'-0"	2'-0"	2'-0"
	SPLICE BOLT SPACING (NOT TO EXCEED 2'-0")	1/2 BSMAX (±1/16") WHEN BSMAX = 2'-0 1/16" TO 4'-0 1/3 BSMAX (±1/16") WHEN BSMAX = 4'-0 1/16" TO 6'-0 1/4 BSMAX (±1/16") WHEN BSMAX = 6'-0 1/16" TO 8'-0					
BFCD	MINIMUM BOLT-TO-FLANGE CLEARANCE AT OUT OF NUT SEE BOLT AT FLANGE DETAIL	1 1/2"	1 3/4"	1 7/8"	2 1/4"	2 1/2"	2 3/4"
PF	MINIMUM BOLT-TO-FLANGE CLEARANCE AT CONNECTION PLATE SEE BOLT AT FLANGE DETAIL	(BFCD + RNWT) PF INSIDE OF FLANGE IS INCREASED BASED ON THE YT & YB VALUE. PF FOR CONNECTION B, F, I AND P ARE THE SAME AS USED ON CONNECTION E					
NWT	NUT AND WASHER THICKNESS	SEE BOLT AT FLANGE DETAIL. NUT THICKNESS IS EQUAL TO THE BOLT DIAMETER AND .15625" WASHER THICKNESS IS USED EVEN IF A WASHER IS NOT REQUIRED.					
RNWT	RISE ON NUT AND WASHER THICKNESS						
TT	THICKNESS TOP FLANGE	REFER TO FRAME CROSS SECTION DRAWING FOR LARGEST FLANGE THICKNESS EITHER SIDE OF THE CONNECTION.					
TB	THICKNESS BOTTOM FLANGE						
YT	BOLT SPACING TOP (ROUND UP TO NEXT 1/2", MIN = S)	3" + TT	3 1/2" + TT	3 3/4" + TT	4 1/2" + TT	5" + TT	5 1/2" + TT
YB	BOLT SPACING BOTTOM (ROUND UP TO NEXT 1/2", MIN = S)	or TB Sloped	or TB Sloped	or TB Sloped	or TB Sloped	or TB Sloped	or TB Sloped
EED(E)	MINIMUM END EDGE DIMENSION	1 1/4"	1 1/4"	1 1/2"	1 3/4"	2 1/4"	2 5/8"
EED(S)	MINIMUM SIDE EDGE DIMENSION	3/4"	1"	1 1/8"	1 1/4"	1 5/8"	2 1/4"
EEDK	END EDGE DIMENSION AT KNEE CONNECTION	1 3/8"	1 3/8"	1 5/8"	1 7/8"	2 3/8"	2 3/4"
BCWM	MINIMUM BOLT CLEARANCE FROM A FLANGE OR WEB WELD — WITHOUT WASHER	7/16"	5/8"	3/4"	13/16"	1"	1 3/8"
	MINIMUM BOLT CLEARANCE FROM A FLANGE OR WEB WELD — WITH HARDENED WASHER	9/16"	3/4"	7/8"	1"	1 1/4"	1 1/2"
WCSM	MINIMUM WIDTH OF CONNECTION PLATE (Standard Connection)	5"	6"	8"	8"	10"	12"
WCHM	MINIMUM WIDTH OF CONNECTION PLATE (Heavy Connection)	N/A	10"	12"	12"	16"	18"
TCMIN	MINIMUM THICKNESS OF CONNECTION PLATE	1/4"	3/8"	7/16"	1/2"	5/8"	1"

Frame Documentation
A325 Connection Bolt Details

05-12-10
Mar '24 06

B 4E/2EH
- Connection Code (See "Connection Code Format" on this drawing)
- Connection Location

CROSS SECTION CONNECTION CODE KEY
(AS SHOWN AT CONNECTIONS ON FRAME CROSS SECTION DRAWINGS)

Flange Brace Material Schedule	
Part Mark	Material
FB4_	L 2" x 2" x 14 Ga.
FB5_	L 2" x 2" x 14 Ga.
FB6_	L 2" x 2" x 1/8"
FB7_	L 2 1/2" x 2 1/2" x 3/16"

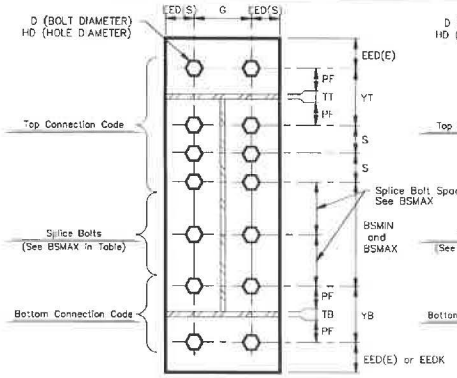

STANDARD CONNECTION DESIGNATION
(CODE 4E/2E SHOWN)

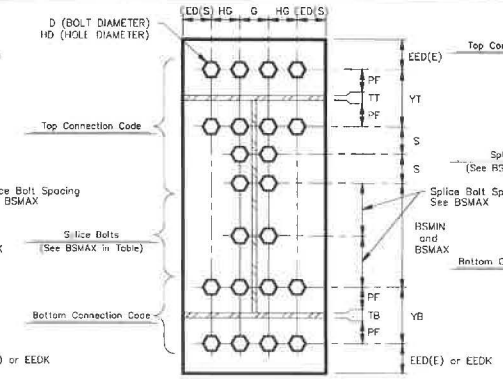

HEAVY CONNECTION DESIGNATION
(CODE 4EH/2EH SHOWN)

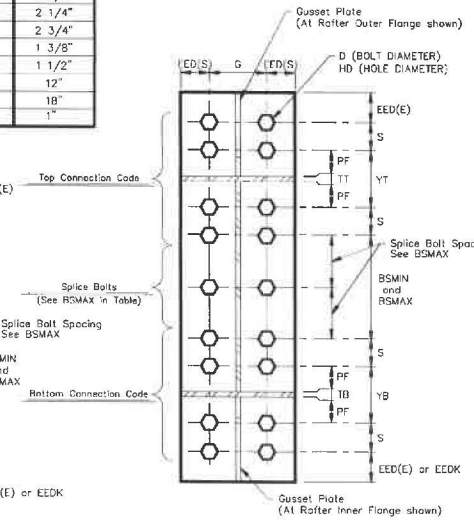

4X CONNECTION DESIGNATION
(CODE 4X/4X SHOWN)

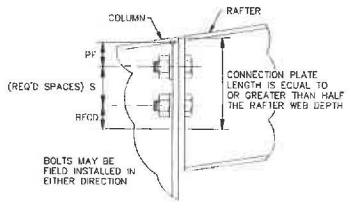

CONNECTION B & P
(Low Side Shown, High Side Similar)

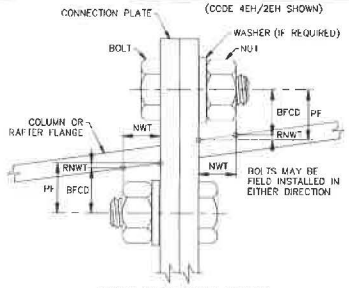

BOLT AT FLANGE DETAIL
(Top Flange Shown, Bottom Flange Similar)

Revision	Date	Description	By

CAPITAL STEEL INDUSTRIES, LLC
C/O Building Services Group 8323 S. SANDERS DR. CENTO RD. SUITE 302
Phone: 800-248-0940
FAX 303-972-2844

Project Name & Location:
BULLDOG BARNS LLC
5120 HIGHWAY 101
FLORENCE, OR 97439-9508

Customer:
CAPITAL STEEL INDUSTRIES LLC
10639 BRADFORD RD.
LITTLETON, CO 80127-4206

Drawing Status:
☐ Issued For Approval (Not For Construction)
☐ Issued For Permit
☒ Issued For Construction

Scale:	NOT TO SCALE
Drawn by:	YMC 2/21/25
Checked by:	CBC 2/25/25
Project Engineer:	EOL
Job Number:	19-B-84746
Sheet Number:	E11 of 11

The engineer whose seal appears hereon is employed by or is contracted to provide engineering services for the manufacturer, Cornerstone Building Brands or one of its affiliates, for the materials described herein. Said seal or certification is limited to the products designed and manufactured by manufacturer only. The undersigned engineer is not the overall engineer of record for this project.

Anchor Rod Drawings

1) This drawing is for anchor rod placement only and is not foundation design.
2) Foundation must be square and level with all anchor rods true in size, location, and projection.
3) Projection shown must be held to keep threads clear of finished concrete.
4) This structural design data includes magnitude and location of design loads and support conditions, material properties, and type and size of major structural members necessary to show compliance with the Order Documents at the time of this issue. Any change to building loads or dimensions may change structural member sizes and locations shown. This structural design data will be superseded and voided by any future mailing.
5) Anchor rod size as noted on the drawings has been determined by shear and tension at the bottom of the base plate. The length of the anchor rod and method of load transfer to the foundation are to be determined by the foundation engineer. Anchor rods are not provided by the metal building manufacturer.
6) Anchor rods are ASTM F1554 Gr. 36 material unless noted otherwise.
7) 3000 psi concrete compressive strength (f'c) is assumed for the purpose of column base plate design unless otherwise noted.

FINISH FLOOR AT ELEVATION 100'-0

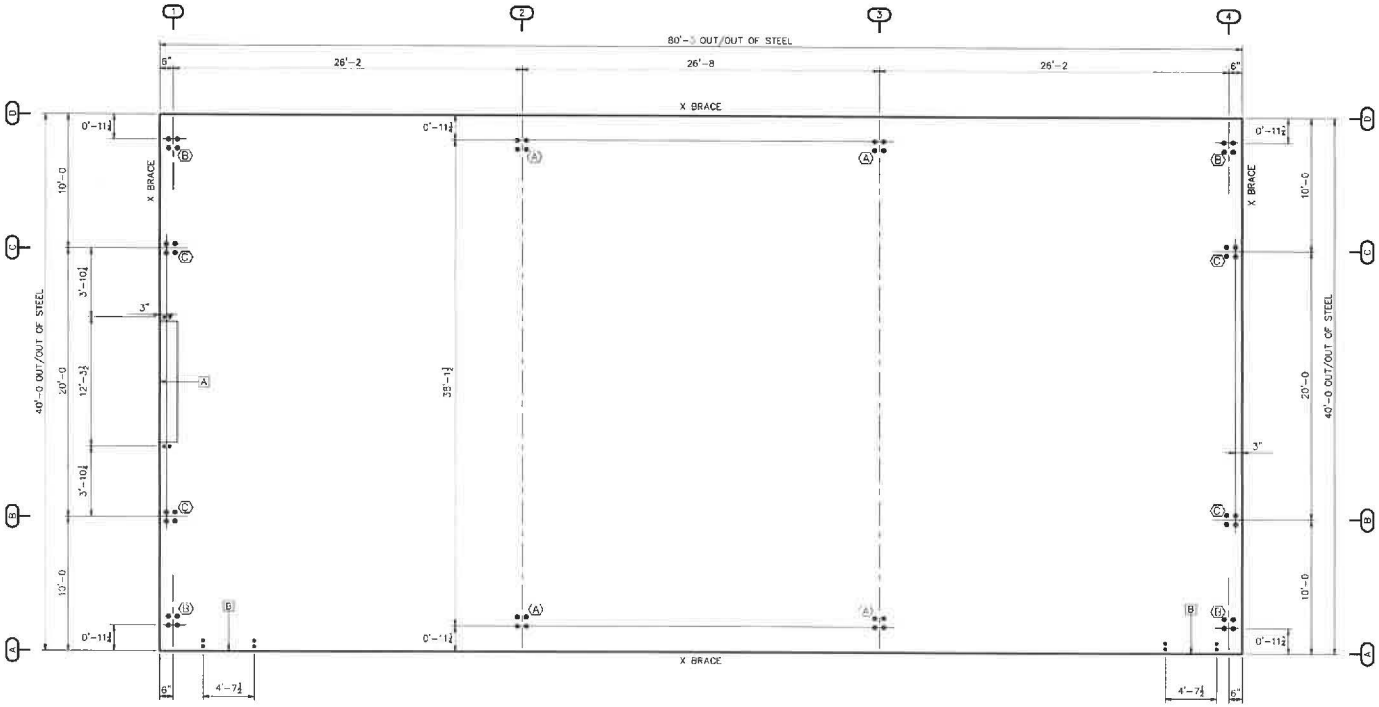

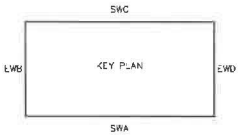

ANCHOR ROD SETTING PLAN

ACCESSORY SCHEDULE

MARK	DESCRIPTION	DETAIL	QUAN.
A	12'-0 X 12'-0 FRAMED OPENINGS	D	1
B	4'-4 X 6'-0 FRAMED OPENINGS	E	2

ANCHOR BOLTS TO BE DESIGNED BY FOUNDATION ENGINEER USING DIAMETERS SHOWN IN THIS TABLE.

ANCHOR ROD DESCRIPTION	QUANTITY
⅝"ø DIAMETER X	12
¾"ø DIAMETER X	48

Revision	Date	Description	By	Ck'd

CAPITAL STEEL INDUSTRIES, LLC
CITY BUILDING SYSTEMS GROUP 8231 S. SANDRE DE CRISTO RD. SUITE 302
PHONE: 800-243-8640
FAX: 800-372-0124

Customer: CAPITAL STEEL INDUSTRIES LLC
1570 S. BROADWAY
LITTLETON, CO 80127-4208

Project Name & Location: BULLOCK BARNS LLC
1570 S. BROADWAY
FLORENCE, OR 97439-6508

Drawing Status: ☐ Issued For Approval (Not For Construction) ☐ Issued For Permit ☒ Issued For Construction

Scale: NOT TO SCALE
Drawn by: KVV 2/19/25
Checked by:
Project Engineer: EOL
Job Number: 19-B-84748
Sheet Number: F1 of 3

The engineer whose seal appears hereon is employed by or is contracted to provide engineering services for the manufacturer, Cornerstone Building Brands or one of its affiliates, for the materials described herein. Said seal or certification is limited to the products designed and manufactured by manufacturer only. The undersigned engineer is not the overall engineer of record for this project.

AISC CODE OF STANDARD PRACTICE TOLERANCES FOR SETTING ANCHOR RODS

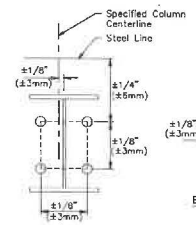

ANCHOR ROD SETTING TOLERANCES

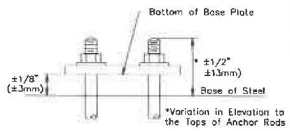

BASE PLATE AND ANCHOR ROD TOLERANCES

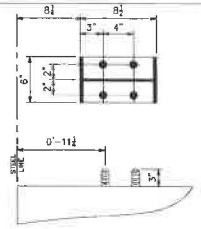

TYPICAL SECTION
A
¾"ø ANCHOR RODS
BASE OF STEEL AT ELEV. 100'-0

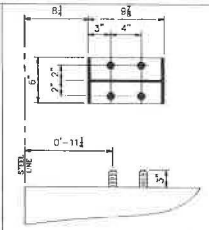

TYPICAL SECTION
B
¾"ø ANCHOR RODS
BASE OF STEEL AT ELEV. 100'-0

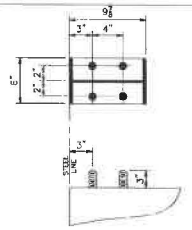

TYPICAL SECTION
C
¾"ø ANCHOR RODS
BASE OF STEEL AT ELEV. 100'-0

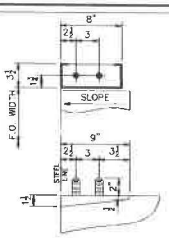

TYPICAL SECTION
D
⅝"ø ANCHOR RODS
BASE OF STEEL AT ELEV. 100'-0

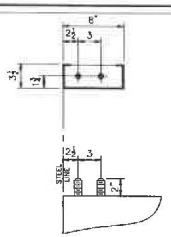

TYPICAL SECTION
E
⅝"ø ANCHOR RODS
BASE OF STEEL AT ELEV. 100' 0

Revision	Date	Description	By	Ck'd

CAPITAL STEEL INDUSTRIES, LLC
CITE Building Services Group 8323 S. SANDRE DE CRISTO RD. SUITE 302
Littleton, CO 80120
PHONE: 800-248-9540
FAX: 303-972-1884

Customer: CAPITA-STEEL INDUSTRIES LLC
17700 SOUTHRIDGE DR.
LITTLETON, CO 80127-4208

Project Name & Location: BULLDOG BARNS LLC
1770 SOUTHRIDGE DR.
FLORENCE, OR 97439-9508

Drawing Status: ☐ Issued For Approval (Not For Construction) ☐ Issued For Permit ☒ Issued For Construction

Scale: NOT TO SCALE
Drawn by: KVV 2/19/25
Checked by:
Project Engineer: EOL
Job Number: 19-B-84746
Sheet Number: F2 of 3

The engineer whose seal appears hereon is employed by or is contracted to provide engineering services for the manufacturer, Cornerstone Building Brands or one of its affiliates, for the materials described herein. Sold seal or certification is limited to the products designed and manufactured by manufacturer only. The undersigned engineer is not the overall engineer of record for this project.

FRAME DESCRIPTION: Endwall EW01
USER NAME:EOLopez JOB NAME:847486A
DATE:02/11/25 FILE:REWORK001
PAGE:EW-1

PATH: R:\jobs\active\Eng\19-B-84746\ver01-adopted\BLDG-A\run01\

SUPPORT REACTIONS FOR EACH LOAD GROUP
NOTE: All reactions are in kips and kip-ft.
TIME:08:59:33

REACTION NOTATIONS

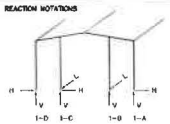

LOAD GROUP REACTION TABLE

COLUMN	1-D			1-C			1-B			1-A		
LOAD GROUP	H	V	L	H	V	L	H	V	L	H	V	L
D	0.0	0.3	0.	0.	1.0	0.0	0.	1.0	0.0	0.0	0.3	0.
C	0.	0.0	0.	0.	0.1	0.0	0.	0.1	0.0	0.	0.0	0.
L	0.0	0.7	0.	0.	4.8	0.0	0.	4.8	0.0	0.0	0.7	0.
S	0.0	0.7	0.	0.	4.8	0.0	0.	4.8	0.0	0.0	0.7	0.
SBAL	0.0	0.5	0.	0.	3.3	0.0	0.	3.3	0.0	0.0	0.5	0.
SUR	0.0	0.4	0.	0.	3.8	0.0	0.	3.8	0.0	0.0	-0.1	0.
SUL	0.0	-0.1	0.	0.	1.7	0.0	0.	1.8	0.0	0.0	0.4	0.
W+	0.0	0.5	0.	0.	-9.4	4.4	0.	-9.4	4.4	0.0	0.5	0.
W-	0.0	0.5	0.	0.	-9.4	-4.8	0.	-9.4	-4.8	0.0	0.5	0.
WR	0.0	0.8	0.	3.9	-17.7	0.0	0.	-9.4	0.0	0.0	0.5	0.
WL	-3.9	-8.3	0.	0.	-0.6	0.0	0.	-9.4	0.0	0.0	0.5	0.
ER	0.	1.7	0.	0.6	-1.7	0.	0.	0.	0.	0.	0.	0.
EL	-0.6	-1.9	0.	0.	1.9	0.	0.	0.	0.	0.	0.	0.
E+	0.	0.	0.	0.	0.	0.3	0.	0.	0.3	0.	0.	0.
E-	0.	0.	0.	0.	0.	-0.3	0.	0.	-0.3	0.	0.	0.

LOAD GROUP DESCRIPTION

D	:	Dead load
C	:	Collateral load
L	:	Live load
S	:	Uniform snow load
SBAL	:	Balanced roof snow
SUR	:	Unbalanced snow -- Wind from right to left
SUL	:	Unbalanced snow -- Wind from left to right
W+	:	Wind load as an inward acting pressure
W-	:	Wind load as an outward acting suction
WR	:	Wind force from the right
WL	:	Wind force from the left
ER	:	Seismic force from right
EL	:	Seismic force from left
E+	:	Seismic force acting inward
E-	:	Seismic force acting outward

FRAME DESCRIPTION: Endwall EW2
USER NAME:EOLopez JOB NAME:847486A
DATE:02/11/25 FILE:REWORK001
PAGE:EW-2

PATH: R:\jobs\active\Eng\19-B-84746\ver01-adopted\BLDG-A\run01\

SUPPORT REACTIONS FOR EACH LOAD GROUP
NOTE: All reactions are in kips and kip-ft.
TIME:08:59:33

REACTION NOTATIONS

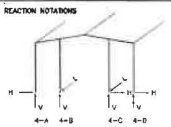

LOAD GROUP REACTION TABLE

COLUMN	4-A			4-B			4-C			4-D		
LOAD GROUP	H	V	L	H	V	L	H	V	L	H	V	L
D	0.0	0.3	0.	0.	1.0	0.0	0.	1.0	0.0	0.0	0.3	0.
C	0.	0.0	0.	0.	0.1	0.0	0.	0.1	0.0	0.	0.0	0.
L	0.0	0.7	0.	0.	4.8	0.0	0.	4.8	0.0	0.0	0.7	0.
S	0.0	0.7	0.	0.	4.8	0.0	0.	4.8	0.0	0.0	0.7	0.
SBAL	0.0	0.5	0.	0.	3.3	0.0	0.	3.3	0.0	0.0	0.5	0.
SUR	0.0	0.4	0.	0.	3.8	0.0	0.	1.7	0.0	0.0	-0.1	0.
SUL	0.0	-0.1	0.	0.	1.7	0.0	0.	1.8	0.0	0.0	0.4	0.
W+	0.0	0.5	0.	0.	-9.4	4.4	0.	-9.4	4.4	0.0	0.5	0.
W-	0.0	0.5	0.	0.	-9.4	-4.8	0.	-9.4	-4.8	0.0	0.5	0.
WR	0.0	0.5	0.	0.	-9.4	0.0	0.	-0.6	0.0	3.9	-8.3	0.
WL	0.0	0.5	0.	0.	-9.4	0.0	-3.9	-17.7	0.0	0.0	8.8	0.
E+	0.	0.	0.	0.	0.	0.2	0.	0.	0.2	0.	0.	0.
E-	0.	0.	0.	0.	0.	-0.2	0.	0.	-0.2	0.	0.	0.
ER	0.	0.	0.	0.	0.	0.	0.	1.9	0.	0.6	-1.9	0.
EL	0.	0.	0.	0.	0.	0.	-0.6	-1.7	0.	0.	1.7	0.

LOAD GROUP DESCRIPTION

D	:	Dead load
C	:	Collateral load
L	:	Live load
S	:	Uniform snow load
SBAL	:	Balanced roof snow
SUR	:	Unbalanced snow -- Wind from right to left
SUL	:	Unbalanced snow -- Wind from left to right
W+	:	Wind load as an inward acting pressure
W-	:	Wind load as an outward acting suction
WR	:	Wind force from the right
WL	:	Wind force from the left
E+	:	Seismic force acting inward
E-	:	Seismic force acting outward
ER	:	Seismic force from right
EL	:	Seismic force from left

FRAME ID #1 20./130./ 40./20./28.417
USER NAME:EOLopez JOB NAME:847486A
DATE:02/11/25 PAGE:1-2 FILE:Frames_D-3.inp

SUPPORT REACTIONS FOR EACH LOAD GROUP
*LOCATION: Gridlines 1 1
NOTES: (1) All reactions are in kips and kip-ft.
(2) The seismic overstrength factor (Omega) is not included in the "RBDWEO" and "RBUPEO" Load Group reactions.
Seismic "BASE-ONLY" combination reactions include an overstength factor of: 2.000
(3) Primary and load types are not considered.
(4) X-bracing reactions (RBDWLW and RBUPEO) are compiled with LWL and LEO groups only.
TIME:08:14:24

REACTION NOTATIONS

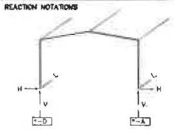

LOAD GROUP REACTION TABLE GRIDLINES * = 2 3

COLUMN	*-D			*-A		
LOAD GROUP	H	V	L	H	V	L
DL	0.4	1.8	-0.0	-0.4	1.8	-0.0
COLL	0.1	0.3	-0.0	-0.1	0.3	-0.0
SNOW	7.5	10.5	-0.0	-7.6	13.6	-0.0
LL	2.5	10.5	-0.0	-2.6	13.6	-0.0
RBDWEO	-0.0	2.3	-0.0	0.0	2.3	-0.0
EQ	-1.0	1.0	-0.0	-1.0	1.0	-0.0
RBUPEO	0.0	-2.3	-3.1	-0.0	-2.3	-3.1
WL1	-8.3	-17.1	-0.0	-4.3	-8.2	-0.0
WL2	-8.8	-10.8	-0.0	-2.8	-1.9	-0.0
WL3	4.3	-8.2	-0.0	8.3	-17.1	-0.0
WL4	2.8	-1.9	-0.0	8.8	-10.8	-0.0
LWL1	2.7	-13.4	-0.0	-1.8	-11.4	-0.0
RBUPLW	0.0	-3.8	-5.1	-0.0	-3.8	-5.1
LWL2	1.8	-11.4	-0.0	-2.7	-13.4	-0.0
LWL3	1.2	-7.1	-0.0	-0.3	-5.1	-0.0
LWL4	0.3	-5.1	-0.0	-1.2	-7.1	-0.0
SBAL	1.8	7.4	-0.0	-1.8	7.4	-0.0
RS	1.5	4.1	-0.0	-1.5	7.2	-0.0

LOAD GROUP DESCRIPTION

DL	:	Roof Dead Load
COLL	:	Roof Collateral Load
SNOW	:	Roof Snow Load
LL	:	Roof Live Load
RBDWEO	:	Downward Acting Rod Brace Load from Long. Seismic
EQ	:	Lateral Seismic Load (parallel to plane of frame)
RBUPEO	:	Upward Acting Rod Brace Load from Long. Seismic
WL1	:	Wind from Left to Right with +GCpi
WL2	:	Wind from Left to Right with -GCpi
WL3	:	Wind from Right to Left with +GCpi
WL4	:	Wind from Right to Left with -GCpi
LWL1	:	Windward Corner Left with +GCpi
RBUPLW	:	Upward Acting Rod Brace Load from Long. Wind
LWL2	:	Windward Corner Left with -GCpi
LWL3	:	Windward Corner Right with +GCpi
LWL4	:	Windward Corner Right with -GCpi
SBAL	:	Code Calculated Balanced Roof Snow Load
RS	:	Unbalanced Right Roof Snow Load

FRAME ID #1 20./130./ 40./20./28.417
USER NAME:EOLopez JOB NAME:847486A
DATE:02/11/25 PAGE:1-3 FILE:Frames_D-3.inp

SUPPORT REACTIONS FOR EACH LOAD GROUP
*LOCATION: Gridlines 3 3
NOTES: (1) All reactions are in kips and kip-ft.
(2) The seismic overstrength factor (Omega) is not included in the "RBDWEO" and "RBUPEO" Load Group reactions.
Seismic "BASE-ONLY" combination reactions include an overstength factor of: 2.000
(3) Primary and load types are not considered.
(4) X-bracing reactions (RBDWLW and RBUPEO) are compiled with LWL and LEO groups only.
TIME:08:14:24

REACTION NOTATIONS

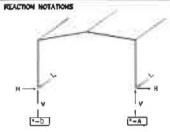

LOAD GROUP REACTION TABLE GRIDLINES * = 2 3

COLUMN	*-D			*-A		
LOAD GROUP	H	V	L	H	V	L
LS	1.3	7.2	-0.0	-1.3	4.1	-0.0
RBDWLW	-0.0	3.9	-0.0	0.0	3.8	-0.0

LOAD GROUP DESCRIPTION

LS	:	Unbalanced Left Roof Snow Load
RBDWLW	:	Downward Acting Rod Brace Load from Long. Wind

NOTES

1) THE REACTIONS PROVIDED ARE BASED ON THE ORDER DOCUMENTS AT THE TIME OF MAILING. ANY CHANGES TO BUILDING LOADS OR DIMENSIONS MAY CHANGE THE REACTIONS. THE REACTIONS WILL BE SUPERSEDED AND VOIDED BY ANY FUTURE MAILING.
2) THE REACTIONS PROVIDED HAVE BEEN CREATED WITH THE FOLLOWING LAYOUT (UNLESS NOTED OTHERWISE).
a) A REACTION TABLE IS PROVIDED WITH THE REACTIONS FOR EACH LOAD GROUP.
b) RIGID FRAMES
(1) GABLED BUILDINGS
(a) LEFT AND RIGHT COLUMNS ARE DETERMINED AS IF VIEWING THE LEFT SIDE OF THE BUILDING, AS SHOWN ON THE ANCHOR ROD DRAWING, FROM THE OUTSIDE OF THE BUILDING.
(b) INTERIOR COLUMNS ARE SPACED FROM LEFT SIDE TO RIGHT SIDE.
(2) SINGLE SLOPE BUILDINGS
(a) LEFT COLUMN IS THE LOW SIDE COLUMN.
(b) RIGHT COLUMN IS THE HIGH SIDE COLUMN.
(c) INTERIOR COLUMNS ARE SPACED FROM LOW SIDE TO HIGH SIDE.
c) ENDWALLS
(1) LEFT AND RIGHT COLUMNS ARE DETERMINED AS IF VIEWING THE WALL FROM THE OUTSIDE.
(2) INTERIOR COLUMNS ARE SPACED FROM LEFT TO RIGHT.
d) ANCHOR ROD SIZE IS DETERMINED BY SHEAR AND TENSION AT THE BOTTOM OF THE BASE PLATE. THE LENGTH OF THE ANCHOR ROD AND METHOD OF LOAD TRANSFER TO THE FOUNDATION ARE TO BE DETERMINED BY THE FOUNDATION ENGINEER.
e) ANCHOR RODS ARE ASTM F1554 Gr. 36 MATERIAL UNLESS NOTED OTHERWISE ON THE ANCHOR ROD LAYOUT DRAWING.
f) X-BRACING
(1) ROD BRACING REACTIONS HAVE BEEN INCLUDED IN VALUES SHOWN IN THE REACTION TABLES.
(2) FOR IBC AND UBC BASED BUILDING CODES, WHEN X-BRACING IS PRESENT IN THE SIDEWALL, INDIVIDUAL LONGITUDINAL SEISMIC LOADS (RBUPEO AND RBDWEO) DO NOT INCLUDE THE AMPLIFICATION FACTOR, Ω_0.
(3) FOR CANADA BUILDING CODE (NBC), WHEN X-BRACING IS PRESENT IN THE SIDEWALL OR ENDWALL, INDIVIDUAL LONGITUDINAL SEISMIC LOADS (RBUPEO & RBDWEO) ARE MULTIPLIED BY FORCE REDUCTION FACTOR, R_d, WHEN SPECIFIED SHORT-PERIOD SPECTRAL ACCELERATION RATIO $I_E F_a S_a(0.2)$ IS GREATER THAN 0.45.
3) REACTIONS ARE PROVIDED AS UN-FACTORED FOR EACH LOAD GROUP APPLIED TO THE COLUMN. THE FOUNDATION ENGINEER WILL APPLY THE APPROPRIATE LOAD FACTORS AND COMBINE THE REACTIONS IN ACCORDANCE WITH THE BUILDING CODE AND DESIGN SPECIFICATIONS TO DETERMINE BEARING PRESSURES AND CONCRETE DESIGN. THE FACTORS APPLIED TO LOAD GROUPS FOR THE STEEL COLUMN DESIGN MAY BE DIFFERENT THAN THE FACTORS USED IN THE FOUNDATION DESIGN.
a) FOR PROJECTS USING ULTIMATE DESIGN WIND SPEEDS SUCH AS 2012 IBC, 2015 IBC, OR FLORIDA BUILDING CODE, THE WIND LOAD REACTIONS ARE AT A STRENGTH VALUE WITH A LOAD FACTOR OF 1.0.
b) FOR IBC CODES, THE SEISMIC REACTIONS PROVIDED ARE AT A STRENGTH LEVEL AND DO NOT CONTAIN THE RHO FACTOR.
c) FOR NBCC CODES, THE SEISMIC REACTIONS PROVIDED DO NOT CONTAIN THE $R_d R_o$ FACTOR.
THE MANUFACTURER DOES NOT PROVIDE "MAXIMUM" LOAD COMBINATION REACTIONS. HOWEVER, THE INDIVIDUAL LOAD REACTIONS PROVIDED MAY BE USED BY THE FOUNDATION ENGINEER TO DETERMINE THE APPLICABLE LOAD COMBINATIONS FOR HIS/HER DESIGN PROCEDURES AND ALLOW FOR AN ECONOMICAL FOUNDATION DESIGN.

Revision	Date	Description	By	Ck'd

CAPITAL STEEL INDUSTRIES, LLC
A Cornerstone Building Brands Group
STEEL FOR THE BUILDER
PHONE: 800-325-8450
FAX: 800-325-8454
8301 S. SANDRE RD. CARSON RD. SUITE 302

Customer: CAPITAL STEEL INDUSTRIES LLC
8301 S. SANDRE RD.
LITTLETON, CO 80127-4208

Project Name & Location:
BUILDING BARNS LLC
1310 HWY 101 N
FLORENCE, OR 97439-9508

Drawing Status:
☐ Issued For Approval (Not For Construction)
☐ Issued For Permit
☒ Issued For Construction

Scale: NOT TO SCALE
Drawn by: KVV 2/19/25
Checked by:
Project Engineer: EOL
Job Number: 19-B-84746
Sheet Number: F3 of 3

The engineer whose seal appears hereon is employed by or is contracted to provide engineering services for the manufacturer, Cornerstone Building Brands or one of its affiliates, for the materials described herein. Said seal or certification is limited to the products designed and manufactured by manufacturer only. The undersigned engineer is not the overall engineer of record for this project.

Field Service Procedures

In Order To Give You Prompt Services And Keep Problems To A Minimum, Please Handle Any Shortages Or Back Charges In The Following Manner:

1. Carefully Check Your Packing List While Unloading.
2. Mark Any Items Which Appear To Be Missing And Notify the Field Service Department At The Number Shown In The Title Block As Soon As Possible. Calling Someone Else Could Delay The Proper Response.

INITIAL CLAIM:
In The Event Of An Error, The Customer Must Promptly Make A Written Or Verbal "Initial Claim" to The Manufacturer For The Correction Of Design, Drafting, Bill Of Materials Or Fabrication Error.
The "Initial Claim" Includes:

1. Description Of The Nature And Extent Of The Errors, Including Quantities.
2. Description Of The Nature And Extent Of Proposed Corrective Work, Including Estimated Man-Hours.
3. Materials To Be Purchased From Other Than the Manufacturer, Including Estimated Quantities and Cost.
4. Maximum Total Cost Of Proposed Corrective Work And Materials To Be Purchased From Other Than The Manufacturer.

SHORT MATERIALS:
Immediately Upon Delivery Of Materials, Quantities Are To Be Verified By The Customer Against Quantities That Are Billed On The Shipping Documents. Neither The Manufacturer Nor The Carrier Is Responsible For Material Shortages Against The Quantities Billed On The Shipping Documents If Such Shortages Are - Not Noted On The Shipping Documents When The Material Is Delivered And Acknowledged By The Carrier's Agent. If The Carrier Is The Manufacturer, Claims For Shortages Are To Be Made By The Customer To The Common Carrier. If The Material Quantities Received Are Correct According To The Quantities Billed On The Shipping Documents, But Are Less Than The Quantities Ordered Or The Quantities That Are Necessary To Complete The Metal Building According To The Order Documents, Claim Is To Be Made To The Manufacturer.

DAMAGED OR DEFECTIVE MATERIAL:
Damaged Or Defective Material, Regardless Of The Degree Of Damage, Must be Noted On The Shipping Documents By The Customer And Acknowledged By The Carrier's Agent. The Manufacturer Is Not Responsible For Material Damaged In Unloading Of Packages Or Nested Materials, Including, But Not Limited To: Fasteners, Sheet Metal, "C" And "Z" Sections And Covering Panels That Become Wet And/Or Damaged By Water While In The Possession Of Others. Packaged Or Nested Material That Become Wet in Transit Must Be Unpacked, Unstacked And Dried By The Customer. If The Carrier Is The Manufacturer, The Customer Must Make Claim For Damaged Directly To The Manufacturer. If The Carrier Is A Common Carrier, The Customer Must Make The Claim For Damage to the Common Carrier. The Manufacturer Is Not Liable For Any Claim Whatsoever Including, But Not Limited To Labor Charges Of Consequential Damages Resulting From Customer's Use Of Damaged Or Defective Materials That Can Be Detected By Visual Inspection.

EXCESSIVE MATERIAL:
The Manufacturer Reserves The Right To Recover Any Material Delivered In Excess Of Those Required By The Order Documents.

OIL CANNING IS NOT A CAUSE FOR REJECTION

Authorization For Corrective Work

Normal Erection Operations Include The Correction Of Minor Misfits By Amounts Of Reaming, Chipping, Welding Or Cutting And The Drawing Of Elements Into Line Through The Use Of Drift Pins. Errors That Cannot Be Corrected By The Foregoing Means Or Which Require Major Changes In The Member Configuration Should Be Reported Immediately To The Owner And the Fabricator By the Erector, To Enable Whoever Is Responsible Either To Correct The Error Or Approve The Most Efficient And Economical Method Of Correction To Be Used By Others. (AISC 303-10, Section 7.14). If The Error Is The Fault Of The Manufacturer An "Authorization For Corrective Work" Must Be Issued In Writing By The Manufacturer To Authorize The Corrective Work At A Cost Not To Exceed The Maximum Total Cost Set Forth. Alternative Corrective Work Other Than That Proposed In The "Initial Claim" May Be Directed By The Manufacturer In The "Authorization Of Corrective Work". Only The Field Service Department May Authorize Corrective Work.

FINAL CLAIM:
The "Final Claim" In Writing Must Be Forwarded By The Customer To The Manufacturer Within (10) Days Of The Completion Of The Corrective Work Authorized By The Manufacturer.

THE "FINAL CLAIM" MUST INCLUDE:

1. Actual Number Of Man-Hours By Dated Of Direct Labor Use On Corrective Work And Actual Hourly Rate Of Pay.
2. Taxes And Insurance On Total Actual Direct Labor.
3. Other Direct Costs On Actual Direct Labor.
4. Cost Of Materials (Not Minor Supplies) Authorized By The Manufacturer To Be Purchased From Other Than The Manufacturer, Including Copies Of Paid Invoices
5. Total Actual Direct Cost Of Corrective Work (Sum Of 1, 2, 3, And 4). The "Final Claims Are Credited To The Customer By The Manufacturer In The Amount Not To Exceed The Lesser Of The Maximum Total Cost Set Forth In The "Authorization For Corrective Work" Or The Total Direct Cost Of Corrective Work.

** IMPORTANT NOTE **
Cost Of Equipment (Rental Or Depreciation), Small Tools, Supervision, Overhead And Profit Are Not Subjected To Claims.

SHIPMENT ARRIVAL TIME:
Every Effort Will Be Made To See That The Carrier Arrives At The Jobsite On The Requested Hour. Manufacturer Makes No Warranty And Accepts No Responsibility For Costs Associated With A Shipment Not Arriving At The Requested Time Unless A Separate Agreement Has Been Made In Writing For A Guaranteed Arrival Time.

Unloading, Handling And Storage

STRUCTURAL:
A Great Amount Of Time And Trouble Can Be Saved If The Building Parts Are Unloaded At The Building Site According To A Pre-Arranged Plan. Proper Location And Handling Of Components Will Eliminate Unnecessary Handling.

NOTE:
Place Marks Are Stenciled On The Primary Structural Members At The Lower End, 1'-0" From The End. Inspect All Shipments Prior To Releasing The Tie-downs For Loads That May Have Shifted During Transit.

REMEMBER SAFETY FIRST:
Blocking Under Columns And Rafters Protect The Splice Plates And The Slab From Damage During The Unloading Process. It Also Facilitates The Placing Of Slings And Cables Around Members For Later Lifting And Allows Members To Be Bolted Together Into Sub-assemblies While On The Ground. Extra Care Should Always Be Exercised In The Unloading Operation To Prevent Injuries From Handling Steel And To Prevent Damage To Materials And The Concrete Slab. If Water Is Allowed To Remain For Extended Periods In Bundles Of Primed Parts Such As Girts, Purlins, Etc., The Pigment Will Fade And The Paint Will Gradually Soften Reducing Its Bond To The Steel. Therefore, Upon Receipt Of A Job, All Bundles Of Primed Parts Should Be Stored At An Angle To Allow Any Trapped Water To Drain Away And Permit Air Circulation For Drying. Puddles Of Water Should Not Be Allowed To Collect And Remain On Columns Or Rafters For Some Reason.

The Cost Of Shop Primer Is Intended To Protect The Steel Framing Only For A Short Period Of Exposure To Ordinary Atmospheric Conditions. The Cost Of Shop Primer Does Not Provide The Uniformity Of Appearance, Or The Durability And Corrosion Resistance Of A Field Applied Finish Coat Of Paint Over Shop Primer.

Roof And Wall Panels

Manufacturer's Roof And Wall Panels Include Color Coated, Galvalume, And Galvanized. Provide Excellent Service Under Widely Varied Conditions. All Unloading And Erection Personnel Should fully Understand That These Panels Are Quality Merchandise, Which Merits Cautious Care And Handling.

UNDER NO CIRCUMSTANCES SHOULD PANELS BE HANDLED ROUGHLY
Packages Of Sheets Should Be Lifted Off The Truck With Extreme Care Taken To Ensure That No Damage Occurs To Ends Of The Sheets Or to Side Ribs. The Packages Should Be Stored Off The Ground Sufficiently High To Allow Air Circulation Underneath The Packages. This Avoids Ground Moisture And Deters People From Walking On The Packages. One End Of The Package Should Be Elevated To Encourage Drainage In Case Of Rain. The Manufacturer Exercises Caution During Fabrication An Shipping Operations To Ensure That All Panel Stock is Kept Dry. However Due To Climatic Conditions, Water Formed By Condensation Of Humid Air Become Trapped Between Sheets. Water Can Also Be Trapped Between The Stacked Sheets When Exposed To Rain. This May Discoloration Caused By Trapped Moisture. The Stain Is Usually Superficial And Has Little Effect On The Appearance Or Service Life Of The Panels As Long As It Not Permitted To Remain On The Panel. However, Moisture In Contact With The Surface Of The panel Over An Extended Period Can Severely Attack The Finish And Reduce The Effective Service Life. See R1-07 Titled "Damage From Condensation Or Trapped Water".

CAUTION:
Care Should Always Be Taken When Walking On Panels. Use Safety Lines And Net When Necessary. Panels Are Slippery. Wipe Dry Any Moisture Or Surface Material That Has Puddle From Bundles Stored On A Slope. Dew, Frost, Or Other Forms Of Moisture Greatly Increase The Slipperiness Of The Panels. Always Assume Panel Surface Is Slippery And Act Accordingly. Never Walk Of Step On Skylights Or Translucent Panels.

Use Wood Blocking To Elevate And Slope The Panels In A Manner That Allows Moisture To Drain. Wood Blocking Placed Between Bundles Will Provide Additional Air Circulation. When Handling Or Unreeling The Panels, Lift Rather Than Slide Them Apart. Burred Edges May Scratch The Coated Surfaces When Sheets Are Slid Over One Another. Never Allow Panels To Be Walked On While On The Ground.

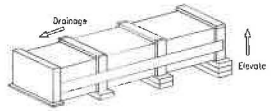

Roof And Wall Panel Damage During Construction

The Quality Of Workmanship In Steel Construction Practices And Handling Methods Used During The Construction Of The Metal Building Can Significantly Affect The Appearance And Performance Of The Building Panels. Panel Damage During Construction Can Be The Result Of Faulty Installation Methods And/or Carelessness.

Overdriven Fasteners Cause Indentations Or Shallow Pockets In The Panel Around The Fastener Head. Rain Water Or Condensation Moisture Combined With Atmospheric Pollutants (principally Sulfur Dioxides) And Dirt Particles Collect In These Pockets. The Combination Of Pollutants And Water Creates Acid Solutions That Will Cause Corrosion Damage To The Panel And Fastener. Rain May Wash Some Pollutants Away, But Moisture In Form Of High Humidity Can Keep These Areas Wet And Continue The Problem. Overdriving The Fastener Also Forces The Sealing Washer From Under The Head Creating A Leak At This Point. Proper Torque Adjustment Of The Screw Gun Or Preferably The Use Of A Depth Gauge Will Eliminate the Problem Of Overdriven Fasteners.

It Is Extremely Important That All Drill Shavings From The Installation Of Panel Fasteners And Filings From The Saw Cutting Of Panels Be Removed From The Panel Surface. Corrosion Can Occur In A Matter Of Hours When These Shavings Or Filings Are Not Removed And Are In Contact With Water Or Condensed Moisture. When Panels Are Pre-Drilled Or Cut In The Stack Prior To Erection All Shavings Must Be Cleaned From Both Sides Of The Panel To Prevent Corrosion Of The Panel By These Particles. It Is Imperative That The Roof Be Swept Clean At Least Daily And Certainly At Job Completion. The Final Cleaning Of The Roof Should Be Done Prior To Installing The Gutter So That The Shavings Are Not Deposited Into The Gutter And Left To Corrode. Any Other Foreign Objects Or Debris Left By Construction Personnel Should Also Be Removed From The Roof During The Erection Of The Roof And The Installation Of Such Equipment As Air Condition Units, Etc..

Personnel Walking On The Panel Can Cause Damage. Workmen Should Step Or Walk In The Broad Flat Areas Of The Panel And Avoid Stepping On The Panel Ends And Edges Which Can Be Bent By Careless Handling. If This Damage Is Severe, The Edges Must Be Straighten Prior To Erection Since The Appearance And/or Weather Tightness Of The Panel Could Be Affected. Dragging One Panel Across Another Can Cut Or Abrade The Coating Causing Unsightly Marks On The Panel Surface.

Attempts To Erect Panels During Windy Conditions Should Be Avoided To Prevent Damage And Of Safety Considerations.

Leaving Dirt Piled Against The Exterior Wall Panels At The Foundation Will Cause Panel Damage. This Dirt May Be Wet Or At Least Contain Some Moisture. Mud May Have Splashed Onto The Wall During Construction. Corrosion Damage May Occur Where This Dirt Or Mud Contacts The Panel. In Areas Where Lime Stabilization Of The Soil Is Required, Corrosion Damage From The Soil's Content Will Be Accelerated And Most Likely Be Severe. All Dirt Must Be Removed From The Panel Walls At The Time Of Completion Of Work. Pre-Painted Panels May Require Touch-up If The Coating Has Been Damaged During Handling Or Erection.

The Appearance Of The Building May Be Affected If Damaged Spots Or Scratches Are Located In Highly Visible Places Such As Around Doors, Windows, Etc.. If Damage Is Extensive Then Replacement Of the Entire Panel Should Be Considered.

Types Of Finishes

SHOP-PRIMED STEEL:
All Structural Members Of The Metal Building System Not Fabricated Of Corrosion Resistant Material Or Protected By A Corrosion Resistant Coating Are Painted With One Coat Of Shop Primer Meeting The Performance Requirements Of SSPC Paint Specification No.15 The Coat Of Shop Primer Is Intended To Protect The Steel Framing For Only A Short Period Of Exposure To Ordinary Atmospheric Conditions. Shop Primed Steel Which Is Stored In The Field Pending Erection Should Be Kept Free Of The Ground And So Positioned As To Minimize Water Holding Pockets, Dust, Mud And Other Contamination Of The Primer Film. Repairs Of Damaged To Primed Surfaces And/Or Removal Of Foreign Material Due To Improper Field Storage Or Site Conditions Are Not The Responsibility Of The Manufacturer. The Manufacturer Is Not Responsible For Deterioration Of The Shop Coat Of Primer Or Corrosion That May Result From Exposure To Atmospheric And Environmental Conditions, Nor The Compatibility Of The Primer To Any Field Applied Coating. Minor Abrasions To The Shop Coat (Including Galvanizing) Caused By Handling, Loading, Shipping, Unloading And Erection Alter Painting Or Galvanizing Are Unavoidable. (MBMA 2012, Chapter 1/ 4.2.4).

GALVALUME:
Galvalume Is The Trade Name For A Patented Steel Sheet And Coil Product Having A Coating Of Corrosion Resistant Aluminum-Zinc Alloy. The Mixture Is Balanced To Obtain The Coating That Retains The Corrosion Resistance And Heat Reflectivity Of Aluminum And Galvanic Protection Of Zinc. The Best Properties Of Both Aluminum And Zinc Are Combined In This Coating And Offer Added Service Life For The Building.

Pre-Painted:
Using Galvalume Steel As A Substrate, Pre-Painted Steel Is Given An Additional Rust Inhibitor Primer Coat. This Primer Coat Further Increases The Corrosion Resistance. These Coatings Are Applied To The Exterior Surface Of The Panels And A Wash Coat Designed Only For Interior Use, Is Applied On The Opposite Side. Galvalume And Pre-Painted Steel Can Give Excellent Service For Many Years If A Few Rules Concerning Their Care And Maintenance Are Observed. All Of These Finishes Are Equally Subject To Damage And Corrosion When Care Is Not Provided.

PAINT AND COATING MAINTENANCE:
Remove Smudge Marks From Bare Galvalume.
Formula 409 Has Proven To Be Somewhat Effective. Lightly Rub With A Clean Cloth And Rinse With Water. Do Not Rub More Than Required To Remove Smudge Marks. No Product Will Remove All Smudge Marks.
Remove Rust Stains:
Soft Scrub Without Bleach Has Proven To be Somewhat Effective. Rub With A Soft Cloth And Rinse With Water. Do Not Rub More than Required To Remove Stain. No Product Will Completely Remove Rust Stains.
To Touch-Up Scratches In Paint (Not Bare Metal):
Clean Area To Be Painted With Mild Detergent. Rinse Thoroughly And Dry. Using A Small Artist's Brush, Lightly Apply A Minimal Amount Of Color Matched Touch-Up Paint Required To Fill/Cover The Scratch. Contact The Building Manufacturer For Assistance With Ordering/Purchasing Touch-Up Paint As Needed.

Damage From Condensation Or Trapped Water

It Is Extremely Important That the Panels Be Monitored For Evidence Or Trapped Water Or Moisture Condensation While Awaiting Erection. High Humidity Conditions With Temperature Cycling Will Cause Condensation Between Panels Within The Bundle. Condensation Can Occur Frequently Near The Sea Coast Or Other Large Bodies Of Water.

If Jobsite Covers Are Used, They Should Be Tied Away From the Bundle At Corners To Allow Air Circulation Around the Bundle. This Will Help Prevent Moisture Evaporating From The Ground Or Building Floor From Condensing On The Panels. Plastic Or Other Impermeable Covers Are Not Recommended. Immediate Action Is Required If The Panels Are Found To Be Wet From Any Cause. The Bundles Must Be Opened And Each Panel Un-Stacked And Thoroughly Dried On Both Sides. Re-Stacking The Panel At A Slight Angle To Each Other To Prevent Nesting Will Allow Air Circulation And Assist In Keeping The Panel Dry. In Severe Conditions Large Fans Can Be Used To Circulate Air Between The Un-Stacked Panels And Accelerate Drying. Damage To The panel Coating Occurs When Panels Become Wet And Are Allowed To stay wet. damage Can Occur To Nested Panels Within 24 to 48 Hours. This Damage Shows Corrosion And Discoloration Of The Panel Surface And is Commonly Called Wet Storage Stain, Zinc Oxidation, Or "White Rust".

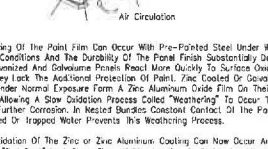

A Softening Of The Paint Film Can Occur With Pre-Painted Steel Under Wet Storage Conditions And The Durability Of The Panel Finish Substantially Decrease. Bare Galvanized And Galvalume Panels React More Quickly To Surface Oxidation Since They Lack The Additional Protection Of Paint. Zinc Coated Or Galvalume Panels Under Normal Exposure Form A Zinc Aluminum Oxide Film On Their Surface Allowing A Slow Oxidation Process Called "Weathering" To Occur That Inhibits Further Corrosion. In Nested Bundles Constant Contact Of The Panels With Condensed Or Trapped Water Prevents this Weathering Process.

Rapid Oxidation Of The Zinc or Zinc Aluminum Coating Can Now Occur And May Lead To "Red Rust" In A Short Time. If Discoloration Or Stains Are Minor A Household Cleaner Of The Type Used On Porcelain Sinks And Bathtubs May Be Used To Remove Stains. Wire Brushing Or Abrasive Materials Should be Avoided Since Scratching Or Removal Of The Coating Could Occur. Panel With Significant Damage Should Be Replaced By The Buyer Prior To Erection.

Safety Commitment

The Builder/Contractor Is Responsible For Applying And Observing All Pertinent Safety Rules And OSHA Standards As Applicable.

The Building Manufacturer Has A Commitment To Manufacture Quality Building Components That Can Be Safely Erected. However The Safety Commitment And Job Site Practices Of The Erector Are Beyond The Control Of The Building Manufacturer.

It Is Strongly Recommended That Safe Working Conditions And Accident Prevention Practices Be The Top Priority Of Any Job Site.

Local, State And Federal Safety And health Standards, Whether Standard Statutory Or Customary, Should Always Be Followed To Help Ensure Worker Safety.

Make Sure All Employees Know The Safest And Most Productive Way Of Erecting A Building. Emergency Procedures Should Be Known To All Employees. Daily Meetings Highlighting Safety Procedures Are Also Recommended. The Use Of Hard Hats, Rubber Sole Shoes For Roof Work, Proper Equipment For Handling Material And Safety Nets Where Applicable Are Recommended

For The Purposes Of Determining Lift Requirements, No Bundle Supplied By The Manufacturer Will Exceed 4,000 Pounds. For Further Information Also reference The Bill Of Materials For Individual Member Weights Of Structural Members. If Additional Information is Required Contact The Field Service Department.

ICE AND SNOW REMOVAL:
Excessive Ice And Snow Removal Should Be Removed From The Roof Immediately To Prevent Damage To Roof And Possible Collapse. Do Not Use Metal Tools To remove The Ice Or Snow As This Can Damage The Paint And/Or Galvalume Coatings. Also Be Careful Around Pipes And Flashings.
Be Extremely Careful If Your Roof Has Light Transmitting Panels. These Panels Will Not Support A Person's Weight And Will Be Difficult Or Impossible To See If They Are Covered With Ice Or Snow. See MBMA Low-Rise Building Systems Manual, Appendix A8 For Details On Snow Removal Procedures. These Procedures Should Commence When Half Of The Design Roof Snow Load Is Realized.

DEBRIS REMOVAL:
Any Foreign Debris Such As Sawdust,Dirt, Leaves, Animal Droppings, Etc. Will Cause Corrosion Of The Roof, Gutters, Trim, Etc. If Left On The Building Surface For A Long Enough Time. The Roof Should Be Periodically Inspected For Such Conditions And If Found, They Should Be Rectified In A Manner Consistent With These Roof Maintenance Guidelines. Never Allow Treated Lumber Or Concrete/Mortar/Grout To Come In Contact With Roof Panels, Especially Galvalume For Extended Periods Of Time.

PERIODIC INSPECTION:
All High-Strength Bolt Be Periodically Be Inspected For Tightness. Particularly In Crane Buildings And After Seismic Or Wind Activity. The Crane Manufacturer Will Specify A Minimum Period But It Should Not Exceed Two Years.

DRAINAGE:

1. Keep Roof Free Of Debris And Keep Debris Out Of Gutter To Allow Water Quickly Drain From The Roof.
2. Do Not Use Wood Blocking To Hold Equipment Off The Panel Seams. This Blocks The Flow Of Water And Hold Moisture.
3. Do Not Allow Rooftop AC Units Or Evaporative Coolers To Drain Onto The Roof.
4. Anything That Traps Or Holds Moisture On A Roof Will Cause Premature Corrosion.

Roof Maintenance Guidelines

1. Inspect Roof For Damage After Heavy Storms.

2. Inspect And Repair As Necessary All Roof Curbs And Other Penetrations With Urethane Sealant.

3. Always Get Manufacturer Approval Before Making Any Modifications To The Roof.

4. Repaint Any Areas That Are Susceptible To Rust As Required.

5. When Performing Roof Maintenance, Always Take The Following Precautions:
   a. Use Fall Protection And Other Safety Protection As Required.
   b. Do Not Walk On Roof Flashing Such As Gutter, Rake, Hip Or Ridge Flash.
   c. Do Not Walk On Light Transmitting Panels (LTP's). They Will Not Support A Person's Weight.
   d. Guard All LTP's And Roof Openings.
   e. Step Only In The Panel Flat Directly On Or In Close Proximity To A Supporting Roof Structural.

6. After Other Trades Have Been On The Roof For Any Reason, Inspect The Roof For Damage Caused By Workers Including Chemical Or Solvent Spills, Scratches In The Paint Or Galvalume Coating, Excessive Foot Traffic And Fractures. Make Sure That All Debris Or Scrap Left Behind By Workers Is Removed From The Roof Immediately. Avoid Using Cutoff Saws And Welding Equipment Over The Roof. The Roof Must Adequately Protected.

FOOT TRAFFIC:
Keep Foot Traffic To A Minimum. Heavy Foot Traffic Can Cause Ponding On Low Pitched Roofs. This Is Particularly True Just Upslope From The Eave And At Endlaps.
Always Walk In The Flat Of The Panel Near A Supporting Roof Structural. Do Not Walk On Trim Or In Gutters.
On Bare Galvalume Roofs, Excessive Foot Traffic May Cause Black Burnish Marks. If Regular Foot Traffic Is Planned For A Roof, Provisions Should Be Made For A Properly Designed And Installed Walkway System. In Order To Limit Access To The Roof, Roof Hatches Or Access Ladders Should Be Locked At All Times. A Sign Posted At The Access Site Stating That Only Authorized Personnel Are Allowed On The Roof. In Addition A Log Book Should Be Kept Of All Visits To The Roof And The Reason For Such Visits.

DISSIMILAR METALS:
Never Allow Your Roof To Come In Contact With, Or Water Runoff From Any Dissimilar Metal Including But Not Limited To:
Copper, Lead Or Graphite. This includes Copper And Arsenic Salts Used In Treated Lumber, Calcium Used In Concrete, Mortar And Grout.

Never Step On Light Transmitting Panels (LTP's) Or Unattended Roof Panels

Panels May Collapse If Not Properly Secured

Roof Panels Must Be Completely Attached To The Purlins And To Panels On Either Side Before They Can Be A Safe Walking Surface. Light Transmitting Panels LTP's) Translucent Panels Can Never Be Considered As A Walking Surface.

Partially Attached Or Unattached Panels Should Never Be Walked On!

Do Not:

1. Step On Rib At Edge Of Panel.

2. Step Near Crease In Rib At Edge Of Panel.

3. Step Within 5 Feet Of Edge On Unsecured Panel.

A Single Roof Panel Must Never Be Used As A Work Platform. An OSHA Approved Runway Should Be Used For Work Platforms. (Consult OSHA Safety And Health Regulations For The Construction Industry). Safety First!

Revision	Date	Description	By	Ck'd

CAPITAL STEEL INDUSTRIES, LLC
CYE Building Systems Group
8321 S. SANDRE DE CRISTO RD., SUITE 302
PHONE: 505-466-5840
FAX: 505-466-5841

Project Name & Location:
BUILDING BARNS, LLC
1 CR 3 & CR 4 Intersection
FLORENCE, OR 97439-9508

Customer:
CAPITAL STEEL INDUSTRIES LLC
8321 S. SANDRE DE CRISTO
LITTLETON, CO 80127-4208

Drawing Status:
☐ Issued For Approval (Not For Construction)
☐ Issued For Permit
☒ Issued For Construction

Scale: NOT TO SCALE
Drawn by: YMC 2/21/25
Checked by: CBC 2/25/25
Project Engineer: EOL
Job Number: 19-B-84746
Sheet Number: R1 of 13

The engineer whose seal appears hereon is employed by or is contracted to provide engineering services for the manufacturer, Cornerstone Building Brands or one of its affiliates, for the materials described herein. Said seal or certification is limited to the products designed and manufactured by manufacturer only. The undersigned engineer is not the overall engineer of record for this project.

Erection Guide	Page R1	
	Date Jul '17	Rev 07

Building Anchorage

1. To Determine That The Foundation Is Square, Measure Diagonal Dimensions To Be Sure They Are Of Equal Length.
2. To Determine That The Foundation Is Level, Set Up A Transit Or Level And Use A Level Rod To Obtain The Elevation At All Columns.
3. Carefully Check The Location Of All Anchor Rods Against The Anchor Rod Setting Plan Furnished By The Manufacturer. All Dimensions Must Be Identical To Assure A Proper Start-up.

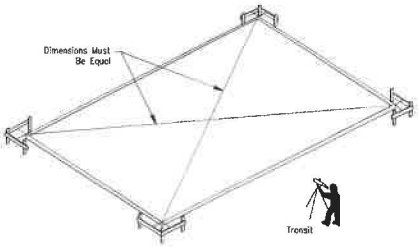

It Is Extremely Important That Anchor Rods Are Placed Accurately And In Accordance With The Anchor Rod Setting Plan. All Anchor Rods Should Be Held In Place With A Template Or Similar Means, So That They Will Remain Plumb And In Correct Location During The Placement Of The Concrete. A Final Check Should Be Made After Completion Of The Concrete Work And Prior To The Steel Installation. This Will Allow Necessary Corrections To Be Made Before Costly Installation Labor And Equipment Arrives.

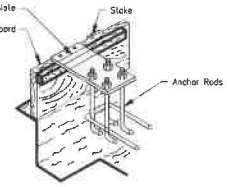

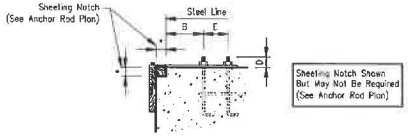

Projection Of Anchor Rods (D) Given On Anchor Rod Plan

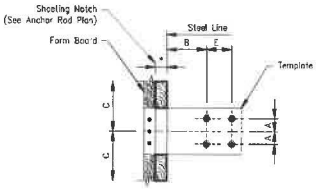

Dimensions A, B, And C Given On Anchor Rod Plan

Pre-Erection Notes:

The Following Notes, Procedures And Suggested Recommendations Are Important Parts Of The Pre-Erection Process.

1.) Prior To This Time The Erection Crew Arrives, A Responsible Person Should Check The Job Site For Foundation Readiness, Square, And Accuracy And Anchor Rod Size And Location.

The Drawing Shown Below Indicates A Method Which May Be Used To Check The Foundation And Bolts For Square.

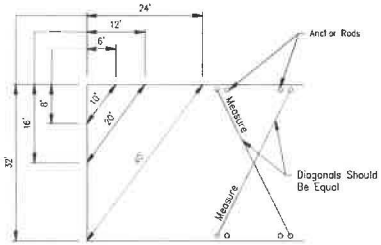

Measure Along Adjacent Sides Of Foundation Using A Pair Of Dimensions Shown. If The Diagonal Distance Between These Points Is As Noted, The Corner Is Square. Diagonal Measurements Between Opposite Anchor Rods Will Indicate If These Bolts Are Set Square.

AISC Code Of Standard Practice For Steel Building And Bridges
Tolerances For Setting Anchor Rods

Anchor Rod Diameter, Inches (mm)	*Horizontal Variation, Inches (mm)
¾" and ⅞" (19 And 22 mm)	¼" (6 mm)
1", 1⅛", 1¼" (25, 31, 38 mm)	⅜" (10 mm)
1½", 2", 2½" (44, 50, 63 mm)	½" (13 mm)

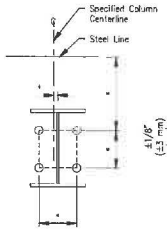

ANCHOR ROD SETTING TOLERANCES

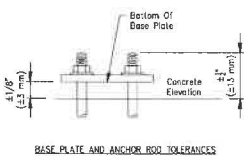

BASE PLATE AND ANCHOR ROD TOLERANCES

* Horizontal Variations Vary Depending On Anchor Rod Diameter. See Above

Erection Tolerances

ERECTION BRACING:
It Is The Responsibility Of The Erector To Determine, Furnish And Install All Temporary Supports Such As Temporary Guys, Beams, Falsework, Cribbing, Or Other Elements Required For The Erection Operation (In Accordance With Section 7.10.3 Of ANSI/AISC 303, Code Of Standard Practice For Steel Building And Bridges).

COLUMN ALIGNMENT TOLERANCES

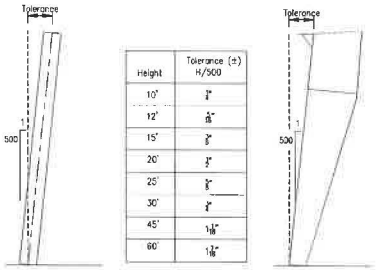

Height	Tolerance (±) H/500
10'	⅜"
12'	7/16"
15'	½"
20'	½"
25'	⅝"
30'	¾"
45'	1 1/16"
60'	1 3/16"

ALIGNMENT TOLERANCE FOR MEMBERS WITH FIELD SPLICES

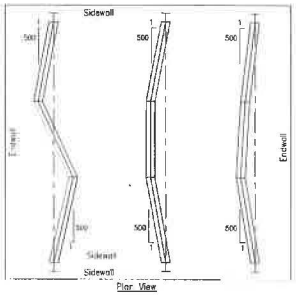

Plan View

MEZZANINE BEAM HEIGHT TOLERANCE

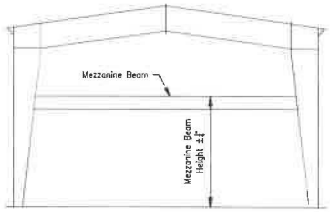

General Erection Notes

1.) All Structural Framing Members, Purlins, Girts, Clips, Flange Braces, Bolts, Bracing Systems, Roof And Wall Panels, Etc. Must Be Installed As Shown On Erection Drawings.

2.) It Is Extremely Important, Especially During Construction, That Panels At The Eaves, Rakes And Ridges Be Kept Secure.

Panel Cautions And Notes

To Minimize Potential Of Corrosive Action At The Bottom Edge Of Wall Panels, The Contractor Must Assure That The Following Procedures Are Followed:

1.) The Concrete Foundation Should Be Cured For A Minimum Of Seven (7) Days Before Wall Panels Are Installed. (Uncured Concrete Is Highly Alkaline And Metal Panels Can Undergo Varying Degrees Of Corrosive Attack When In Direct Contact With The Concrete.) After The First Week Of The Curing Cycle, The Reaction Between Metallic Coatings On Steel And The Concrete Is Essentially Halted.

2.) Top Of Finish Grade At Building To Be A Minimum Of Four (4) Inches Below Bottom Of Panel.

3.) Finish Grade Is To Slope Away From Building To Ensure Proper Drainage.

4.) Upon Completion Of Finish Grading, All Dirt Is To Be Cleaned From Around Base Of Wall Panel Where It May Have Collected In Panel Notch Or On Base Trim.

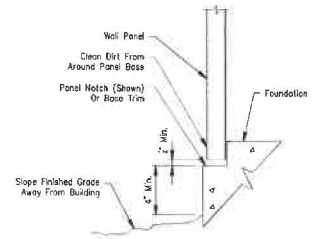

Fastener Installation

Correct Fastener Installation Is One Of The Most Critical Steps When Installing Roof/Wall Panels. Drive The Fastener In Until It Is Tight And The Washer Is Firmly Seated. Do Not Overdrive Fasteners.
A Slight Extrusion Of Neoprene Around The Washer Is A Good Visual Tightness Check. Always Use The Proper Tool To Install Fasteners. A Fastener Driver (Screw Gun) With A RPM Of 1700–2000 Should Be Used For Self-Drilling Screws. A 500–600 RPM Fastener Driver Should Be Used For Self-Tapping Screws. Discard Worn Sockets, These Can Cause The Fastener To Wobble During Installation.

Note: Always Remove Metal Filings From Surface Of Panels At The End Of Each Work Period. Rusting Filings Can Destroy The Paint Finish And Void Any Warranty.

Correct Compression Of Sealing Washer | Too Tight Compression Of Sealing Washer | Too Loose Compression Of Sealing Washer

Tape And Tube Sealant

Proper Tape And Tube Sealant Application Is Critical To The Weather Tightness Of A Building. Tape Sealant Should Not Be Stretched When Installed. Apply Only To Clean, Dry Surfaces. Keep Only Enough Sealants On The Roof That Can Be Installed In A Day. During Warm Weather, Store Sealants In A Cool Dry Place. During Cold Weather (below 60°) Sealants Must Be Kept Warm (60°–90°) Until Application. After Tape Sealant Has Been Applied, Keep Protective Paper In Place Until Panel Is Ready To Be Installed.

Important Note

All Details, Recommendations And Suggestions Contained In This Erection Guide Of This Drawings Set Are For General Guidelines Only, And Not Mean: To Be All-inclusive. Industry Accepted Installation Practices With Regard To All Areas Not Specifically Discussed In This Section Should Be Followed. Only Experienced, Knowledgeable Installers Familiar With Accepted Practices Should Be Used To Assure A Quality Project.

It Is Emphasized That The Manufacturer Is Only A Manufacturer Of Metal Building Components And Is Not Engaged In The Installation Of Its Products. Opinions Expressed By The Manufacturer About Installation Practices Noted In The Erection Guide Are Intended To Represent Only A Guide. Both The Quality And Safety Of Installation And The Ultimate Customer Satisfaction With The Completed Building Are Determined By The Experience, Expertise, And Skills Of The Installation Crews, As Well As The Equipment Available For Handling The Materials. Actual Installation Operations, Techniques And Site Conditions Are Beyond The Manufacturers Control.

Revision	Date	Description	By	Ck'd

CAPITAL STEEL INDUSTRIES, LLC
A Member Of The Nucor Group 8321 S. SAGAUK DR CREEK RD. SUITE 302
LITTLETON, CO 80127
PHONE: 303-972-8800
FAX: 303-972-8866

Customer: CAPITAL STEEL INDUSTRIES LLC
Project Name & Location: BULLDOG BARNS LLC
STORAGE BUILDING
LITTLETON, CO 80127–4208
FLORENCE, OR 97439–9508

Issued For Approval (Not For Construction)
Issued For Permit
Drawing Status: ☒ Issued For Construction

Scale: NOT TO SCALE
Drawn by: YMC 2/21/25
Checked by: CBC 2/25/25
Project Engineer: EOL
Job Number: 19-B-84746
Sheet Number: R2 of 13

The engineer whose seal appears hereon is employed by or is contracted to provide engineering services for the manufacturer, Cornerstone Building Brands or one of its affiliates, for the materials described herein. Said seal or certification is limited to the products designed and manufactured by manufacturer only. The undersigned engineer is not the overall engineer of record for this project.

PBR Roof Panels

For PBR Roofs With Ridge Panels, It Is Recommended That Both Sides Of The Ridge Be Sheated Simultaneously. This Will Keep The Insulation Covered For The Maximum Amount Of Time And The Panel Ribs Can Be Kept In Proper Alignment For The Ridge Panel. This Is Critical On The PBR Panels So That The Ridge Caps Can Be Properly Installed. Check For Proper Coverage As The Sheeting Progresses.

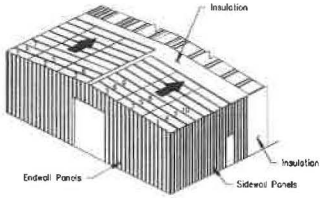

Install The First Run Of Roof Panels Across The Building From Eave To Eave Or Eave To Ridge. To Allow Proper Installation Of The Rake Trim, The Starting Location For The First Panel Must Be As Shown In The Rake Details Included With The Erection Drawings. When The First Run Is Properly Located And Aligned With The Correct Endlaps And Eave Overhangs, Fasten To Purlins. Roof Panels Should Be Installed So That The Sidelap Is In A Direction Away From Prevailing Wind. Refer To Appropriate Lap Details Included With The Erection Drawings.

Install Remaining Roof Insulation And Panels. To Avoid Accumulative Error Due To Panel Coverage Gain Or Loss, Properly Align Each Panel Before It Is Fastened. Occasional Checks Should Be Made To Ensure That Correct Panel Coverage Is Maintained. Special Attention Should Be Given To Fastener, Sealant and Closure Requirements. Refer To Details Included With The Erection Drawings.

At Finishing End Of Roof, The Last panels May Require Field Modification For Installation Of Rake Trim. Refer To Rake Details Included With The Erection Drawings. DO NOT BACK LAP THROUGH FASTENED ROOF PANELS.

NOTE: Roof Types And Installation Requirements Will Vary. Refer To The Appropriate Details For Specific Panel Used.

IMPORTANT: Loose Fasteners, Blind Rivets, Drill shavings, Etc., Must Be Removed From The Roof To Guard Against Corrosion.

Wall Panels

Proper Horizontal And Vertical Alignment Of Supporting Structure (Girts Or Other Framing) Is The Responsibility Of The Installer. Failure To Align The Secondary members Properly Prior To Wall Installation Can Have A Direct Impact On The Final Appearance And Performance Of The Installed Wall System For Which The Metal Building Manufacturer Is Not Responsible.

Before Installing Wall Panels, The Girts Must Be Aligned To A Level Position So That There Is No Visible Sag. This Should Be Done Directly Ahead Of Panel Installation.

Girt Leveling May Be Accomplished By Standing A Section Of Cable Angle Vertically Against The Outside Girt Flanges At Approximate Mid-bay Location. When Girts Are Level, Attach The Girt Flanges To The Angle With Vise Grip Pliers Or Temporary Screws. Wood Blocking Cut To Fit The Spaces May Also Be Used For Alignment.

Note:
Temporary Girt Blocking Is Not Recommended On Concealed Fastener Panels. The Removal Of The Blocks After Panel Installation Can Cause Oil Canning.

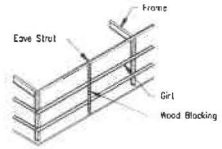

Note:
Wall Panel Type And Installation Details Will Vary. Refer To The Erection Drawings And Details For The Specific Panel Used For Your Building.

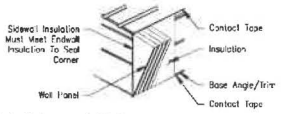

If Walls Are To Be Insulated With Blanket Insulation Over Girt Girt Flanges, Base And Eave, Place A Continuous Run Of Contact Tape Along The Eave Strut And Base Member.

Note:
At The Base, Cut Off The Insulation A Minimum Of ½" Above The Bottom Of The Wall Panel. This Will Prevent The Insulation From Hanging Below The Wall Panel And Wicking Moisture.

Note:
Additional Insulation May Be Required To Fill The Eave Strut And Prevent Condensation In Certain Climate Regions

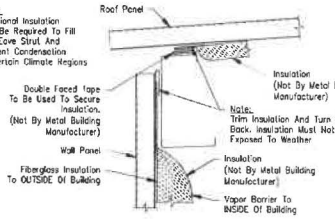

Eave Detail
(See Erection Drawings)

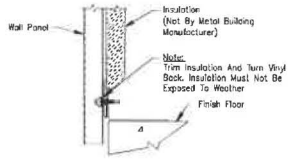

Base Detail
(See Erection Drawings)

Sidewall Panels Should Be Installed So That The Panel Sidelap Is In A Direction Away From The Prevailing Wind. Refer To Appropriate Lap Detail Included With Erection Drawings.)

Note:
Check Periodically To Ensure That All Panels Are Aligned And Plumb.

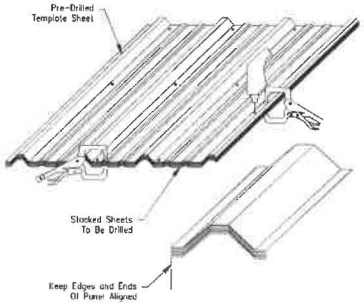

Screw Alignment Panel
(Through Fastened Panel Only)

Note:
After Drilling Panels, It Is Important To Clean Metal Filings Off All Panel Surfaces, Including Between Panels That Are Not Installed That Day, To Avoid Rust Stains.

Suggested Method Of Purlin Attachment For Building Accessories

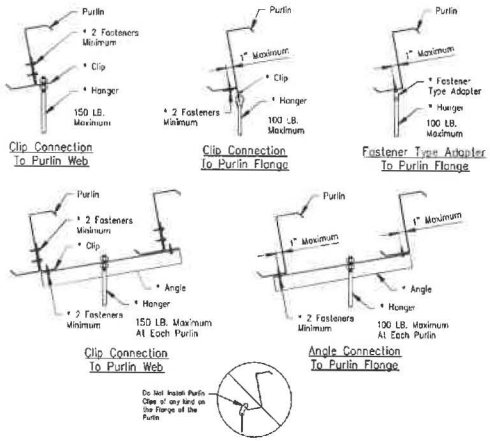

* Denotes Material Not Provided By Metal Building Manufacturer.

The Total Hanger Load Shall Not Exceed The Design Collateral Load For The Building. Example:
5'-0 (Purlin Spacing) X 5'-0 (Hanger Spacing) X 6 PSF (collateral Load) = 150 Lbs.
See Cover Sheet For Design Collateral Load For This Building.
Note: If The Building Is Designed For 0 PSF Collateral Load, Then Adding Any Suspended System (i.e. Duct Work, Piping, Lights, Ceilings, Etc.) Will Correspondingly Reduce The Design Live Load.

Roof Curbs When Not Supplied By Building Manufacturer

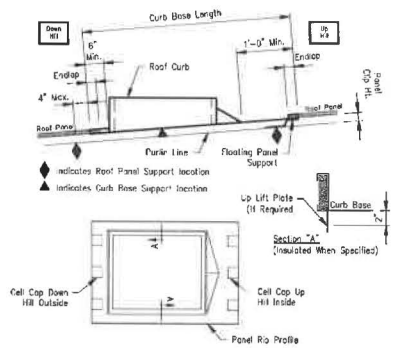

The Curb Details Shown Illustrate The Building Manufacturers Recommended Curb Style And Installation Method. It Is the Erector/Installer's Responsibility To Provide The Proper Curb Style And Install Them In Accordance With The Procedures Established By These Details. Failure By The Erector/Installer To Follow These Recommendations May Result In The Curbs Damaging The Roof System Or Excluded From Warranties.

All Roof Curbs To Be:
1. .080 Aluminum Or 18 Ga. Stainless Steel (No Galvalume® Or Galvanized).
2. Panel Rib To Panel Rib (No Flat Skirt Or Lay-Over Curbs).
3. Installed With Down Hill End Over Panel And Up Hill End Under Panel Application For Water Flow At Panel Splice.
4. Up Lift Prevention For Clip Applied Roof Systems Are Required If:
   a. Wind Loads Exceed 110 MPH.
   b. Curb Nose Crosses A Purlin.
5. Supported on (4) Sides By Primary Or Secondary Framing
6. Maximum Single Curb Weight Recommended Is 1500 Lbs.

Roof Jack Installation when Not Supplied By Building Manufacturer

General Installation Notes

- Do Not Use Galvanized Roof Jacks, Lead Hats, Or Other Residential Grade Roof Jacks. These Roof Jacks Do Not Have 20 Year Service Life And In Case Of Lead Hats Will Cause Galvanic Corrosion Of The Roof Panel.
- Use EPDM Rubber Roof Jacks With An Integral Aluminum Band Bonded Into The Perimeter Of The Base. EPDM Roof Jacks Have A Temperature Range From -85°F To 212°F. Use Silicone Roof Jacks For High Temperatures. Silicone Roof Jacks Have A Temperature Range Of -100°F To 437°F.
- Retrofit Roof Jacks Are Available For Applications in Which The Top Of The Pipe Is Inaccessible, Eliminating The Possibility Of Sliding The Roof Jack Over The Top Of The Pipe.
- Do Not Use Tube Sealant To Seal The Roof Jack To The Roof Panels. Use Roll Tape Sealer Between The Roof Jack And The Roof Panel And Attach The Roof Jack To The Roof Panel With Fastener #4 ¾" – 14 X ⅝" LL SD W/washer At 1" O.C. Around The Base Of The Roof Jack. See Table Below For Quantities.
- Trim The Top Of The Roof Jack To Fit Over The Pipe. Roll Down The Roof Jack Over The Pipe And Apply Tape Sealer For The Perimeter Of The Roof Jack Base Between The Roof Jack And the Roof Panel. Apply Tape Sealer Around The Pipe And Install A Stainless Steel Clamp (Not By Bldg. Mfr.) Over The Top Of The Roof Jack And Firmly Tighten To Form A Secure Compression Seal.
- If The Pipe Diameter Is So Large To Block The Flow Of Water Down The Roof Panel, A Flat Base Roof Curb Must Be Installed Into The Roof And The Roof Jack Will Be Sealed To The Curb. A Two Piece Curb May Be Required When The Top Of The Pipe Is Inaccessible.
- In Northern Climates, The Pipe Penetration Should Be Protected From Moving Ice Or Snow With A Snow Retention System Immediately Up Slope From The Pipe.

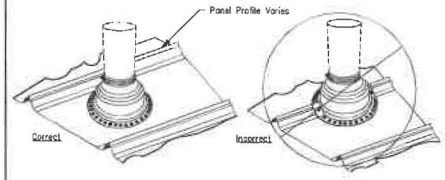

Install Pipe In Center To Allow Base Of Roof Jack To Lay Flat on Panel. Cannot Encompass More Than 75% Of Panel.

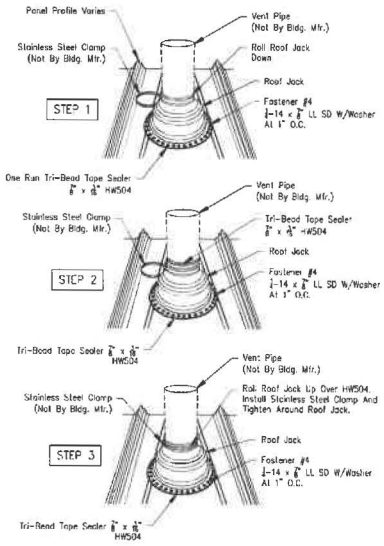

Revision	Date	Description	By	Ck'd

CAPITAL STEEL INDUSTRIES, LLC
C/O Buckley Services Group 8320 S. SANDRE DE CRISTO RD. SUITE 302
Phone 505-471-2000
Fax 505-471-2004

Customer: CAPITAL STEEL INDUSTRIES LLC
10639 BRADFORD RD
LITTLETON,CO 80127-4208

Project Name & Location:
BUILDOG BARNS LLC
3120 HIGHWAY 101
FLORENCE,OR 97439-8508

Drawing Status:
☐ Issued For Approval (Not For Construction)
☐ Issued For Permits
☒ Issued For Construction

Scale: NOT TO SCALE
Drawn by: YMC 2/21/25
Checked by: CBC 2/25/25
Project Engineer: EOL
Job Number: 19-B-84746
Sheet Number: R3 of 13

The engineer whose seal appears hereon is employed by or is contracted to provide engineering services for the manufacturer, Cornerstone Building Brands or one of its affiliates, for the materials described herein. Said seal or certification is limited to the products designed and manufactured by manufacturer only. The undersigned engineer is not the overall engineer of record for this project.

Bearing Frame Endwall - Inside Column Extension to Bridge Channel Between Purlins - Flush

Page EF07112 | Date Mar '15 | Rev 00

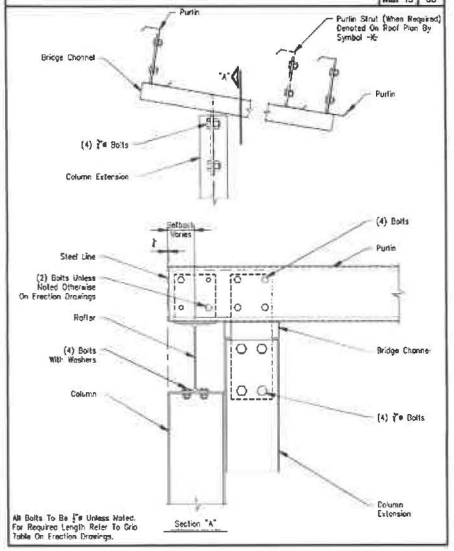

All Bolts To Be ⅞"ø Unless Noted. For Required Length Refer To Grip Table On Erection Drawings.

By-Pass Girt to Column - Standard Connection - Flange Brace FB4_

Page CF01124 | Date May '19 | Rev 02

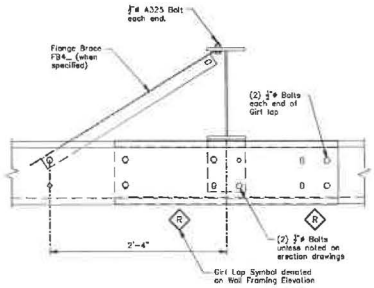

Erection Note
Lap and attachment of Girt varies refer to "Elevation Plan" and Lap Detail for requirements.

Erection Note
Flange Braces may be required one or both sides of Column.
For requirements, and locations at Main Frame and Rigid Frame in Endwall refer to "Cross Section".
For requirements, and locations at Bearing Frame Endwall refer to "Elevation Plan".

By-Pass Girt to Column - Standard Connection Flange Brace FB5_ or FB7_

Page CF01127 | Date May '19 | Rev 02

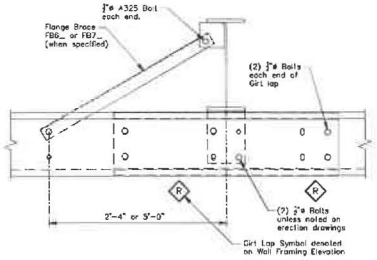

Erection Note
Lap and attachment of Girt varies refer to "Elevation Plan" and Lap Detail for requirements.

Erection Note
Flange Braces may be required one or both sides of Column.
For requirements, and locations at Main Frame and Rigid Frame in Endwall refer to "Cross Section".
For requirements, and locations at Bearing Frame Endwall refer to "Elevation Plan".

Purlin to Rafter - Standard Connection - Flange Brace FB4_

Page CF02036 | Date May '19 | Rev 01

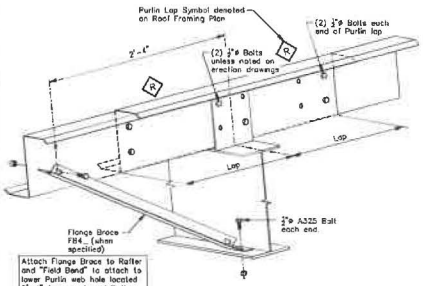

Attach Flange Brace to Rafter and "Field Bend" to attach to lower Purlin web hole located 2"-4" from center of Rafter.

Erection Note
Lap and attachment of Purlin varies refer to Roof Plan and Lap Detail for requirements.

Erection Note
Flange Braces may be required one or both sides of Rafter.
For requirements, and locations at Main Frame and Rigid Frame in Endwall refer to "Cross Section".
For requirements, and locations at Bearing Frame Endwall refer to "Roof Plan".

Sag Angle Attachment at Endwall Rake

Page CF03048 | Date Aug '24 | Rev 04

Sag angles are not to be installed on the same girt face as panels to allow girts to be braced on both sides

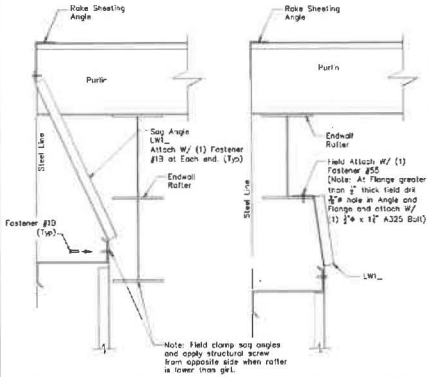

Rafter Outside of Girt Space | **Rafter Inside of Girt Space**

Single Clevised Rod Brace attachment

Page PF04113 | Date Apr '24 | Rev 04

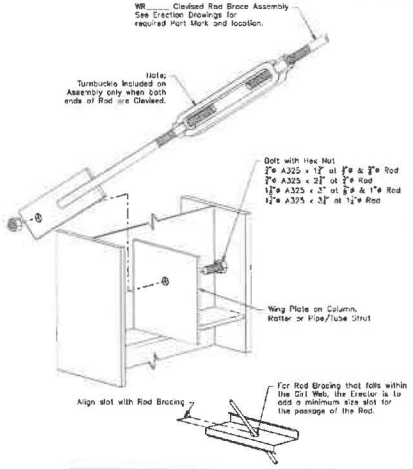

ERECTION NOTE: DETAIL SHOWN AT COLUMN AND IS SIMILAR AT RAFTER OR PIPE/TUBE STRUT.

Column Base Angle Detail With Flush Column

Page BF01005 | Date Apr '16 | Rev 00

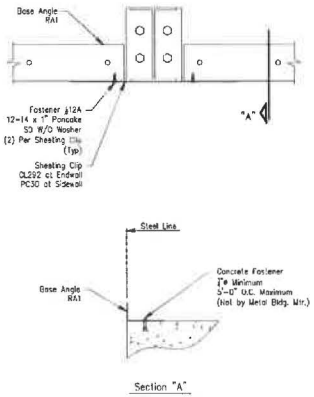

Base framing is supplied in standard lengths. Modifications such as cutting of columns or openings, are to be handled in the field.

Corner Base Angle Detail With By-Pass Sidewall Column Setback Less Than 4"

Page BF01013 | Date Nov '17 | Rev 02

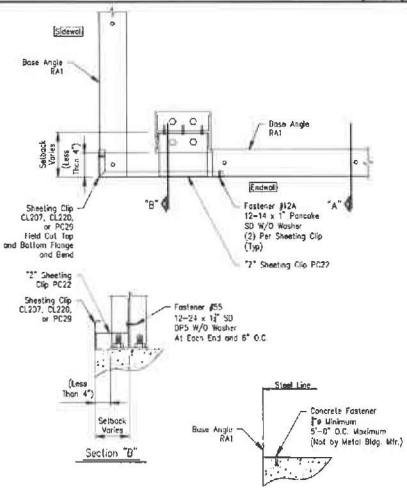

Base framing is supplied in standard lengths. Modifications such as cutting of columns or openings, are to be handled in the field.

Revision	Date	Description	By	Ck'd

CAPITAL STEEL INDUSTRIES, LLC
C/O Building Services Group
6231 S. SANDRA DR. CWSD RD. SUITE 302
PHONE 800-248-8449
FAX 303-872-2614

Customer: CAPITAL STEEL INDUSTRIES LLC
10639 BRADFORD RD
LITTLETON,CO 80127-4008

Project Name & Location: BULLDOG BARNS LLC
3120 HIGHWAY 101
FLORENCE,OR 97439-9508

Drawing Status:
☐ Issued For Approval (Not For Construction)
☐ Issued For Permit
☒ Issued For Construction

Scale: NOT TO SCALE
Drawn by: YMC 2/21/25
Checked by: CBC 2/25/25
Project Engineer: EOL
Job Number: 19-B-84746
Sheet Number: R4 of 13

The engineer whose seal appears hereon is employed by or is contracted to provide engineering services for the manufacturer, Cornerstone Building Brands or one of its affiliates, for the materials described herein. Said seal or certification is limited to the products designed and manufactured by manufacturer only. The undersigned engineer is not the overall engineer of record for this project.

Girt Connection At Bypass Column

Page CF01120 | Date May '23 | Rev 03

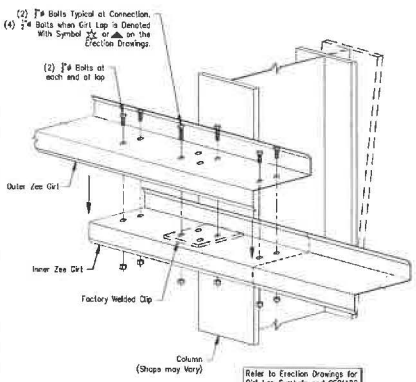

All Bolts to be 3/8" ø Unless Noted. For Required Length Refer to Grip Table on Erection Drawings.

Bypass Zee Installation

Page CF01121 | Date Apr '19 | Rev 01

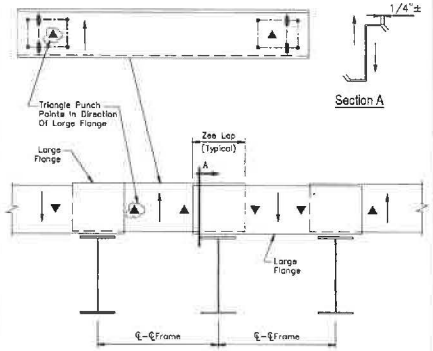

The large leg of the Zee must be alternated from top to bottom in order to nest the member correctly. A triangle has been added to the end of the Zee near the connection holes, that will point to the large leg of the member.

Girt And Purlin Connection At Bypass Column And Rafter

Page CF01122 | Date May '23 | Rev 04

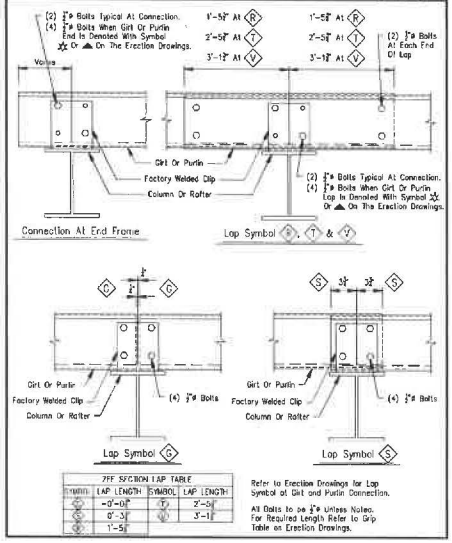

FFF SECTION LAP TABLE			
SYMBOL	LAP LENGTH	SYMBOL	LAP LENGTH
R	-0'-0½"	T	2'-5½"
G	0'-3½"	V	3'-1½"
S	1'-5½"		

Refer to Erection Drawings for Lap Symbol at Girt and Purlin Connection.

All Bolts to be 3/8" ø Unless Noted. For Required Length Refer to Grip Table on Erection Drawings.

Girts At Column Flush Sidewall Or Endwall Girts

Page CF01123 | Date Apr '19 | Rev 02

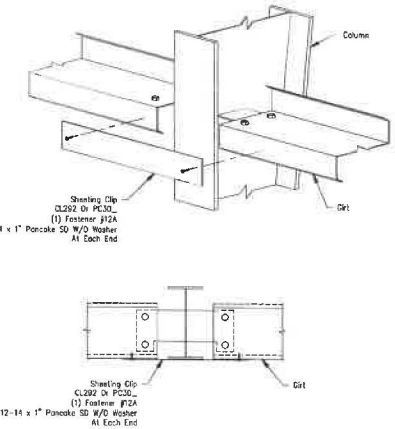

Notes:
Zee Girt Shown
Cee Girt Similar
All Bolts to Be 3/8" ø Unless Noted For Required Length Refer To Grip Table On Erection Drawings.

Rake Edge Strip Purlins - Partial Bay Length Purlin Details

Page CF02005 | Date Feb '23 | Rev 03

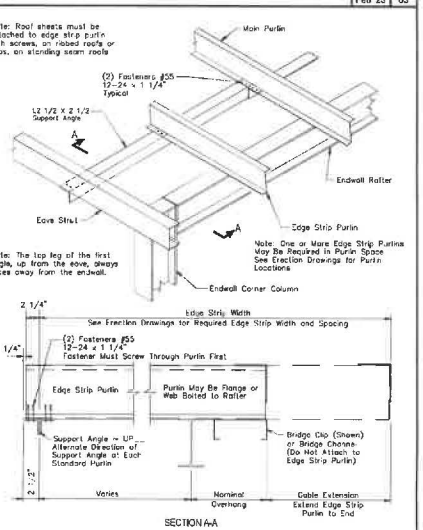

SECTION A-A

Eave Strut Connection Flush / Bypass Column - Interior Bay Column - Roof Slope 4 1/2:12 Or Less

Page CF02030 | Date Sep '17 | Rev 02

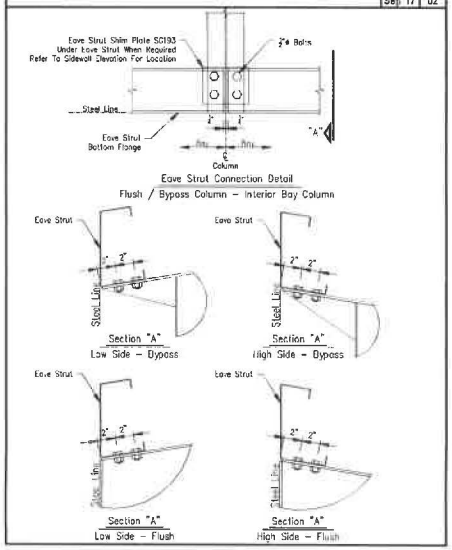

Eave Strut Connection Flush / Bypass Column - End Bay Column - Roof Slope 4 1/2:12 Or Less

Page CF02033 | Date Sep '17 | Rev 04

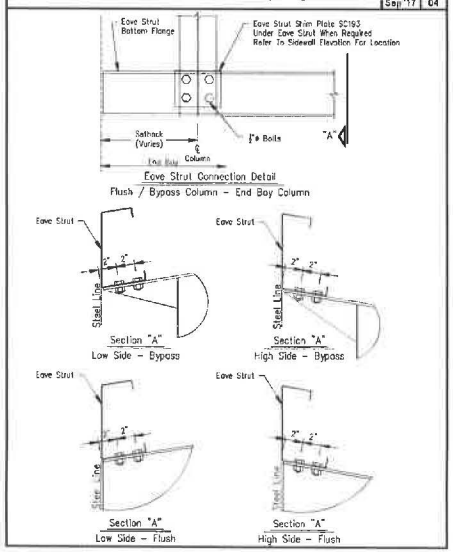

Purlin with Anti-Roll Back-up Clip at Rafter

Page CF02035 | Date Dec '14 | Rev 04

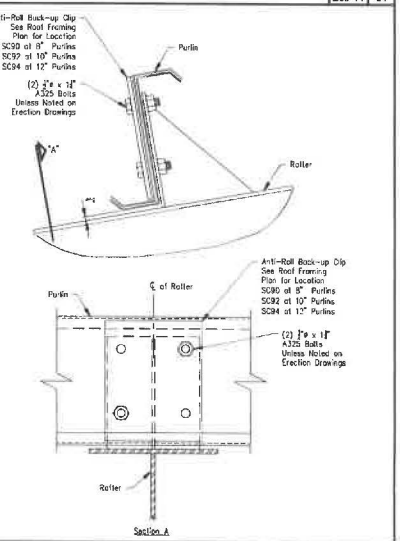

Revision	Date	Description	By	Ck'd

CAPITAL STEEL INDUSTRIES, LLC
4125 S. SANTA FE DR. SUITE 102
LITTLETON, CO 80120
Phone: 303-762-8088
Fax: 303-762-1637
Web: www.capitalsteel.biz

Customer: CAPITAL STEEL INDUSTRIES LLC
4125 S. SANTA FE DR.
LITTLETON, CO 80120 - 4208

Project Name & Location:
BULLDOG BARNS LLC
1125 BUCKLEY ROAD
FLORENCE, OR 97439-9508

Drawing Status:
☐ Issued For Approval (Not For Construction)
☐ Issued For Permit
☒ Issued For Construction

Scale:	NOT TO SCALE
Drawn by:	YMC 2/21/25
Checked by:	CBC 2/25/25
Project Engineer:	EOL
Job Number:	19-B-84746
Sheet Number:	R5 of 13

The engineer whose seal appears hereon is employed by or is contracted to provide engineering services for the manufacturer, Cornerstone Building Brands or one of its affiliates, for the materials described herein. Said seal or certification is limited to the products designed and manufactured by manufacturer only. The undersigned engineer is not the overall engineer of record for this project.

8" Sidewall Girts and Non-Aligned Girts or Open Endwall at Bypass Corner Column with Variable Frame Setback

Page EF03503 | Date Jan '16 | Rev 01

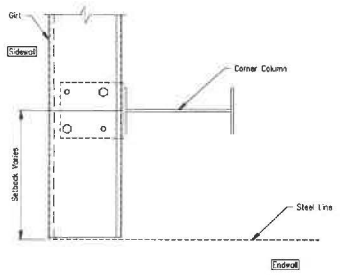

Note:
Zee Girt Shown
Cee Girt Similar

All Bolts To Be ⅜"ø Unless Noted
For Required Length Refer to Grip
Table On Erection Drawings.

Bypass Sidewall and Endwall Girts - No Sidewall Girt - Variable Frame Setback - Endwall Girt Attaches to Inner Column Flange

Page EF03517 | Date Feb '17 | Rev 00

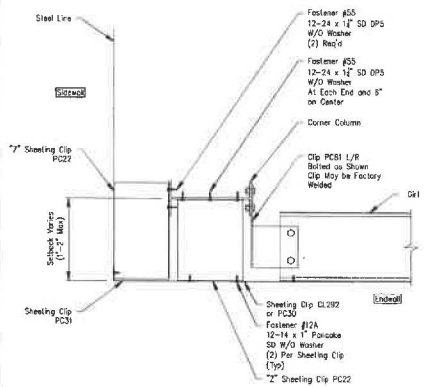

Bypass Sidewall Girts and Flush Endwall Girts at Corner Column Endwall Girt Attaches to Inner Column Flange

Page EF03700 | Date Jan '16 | Rev 01

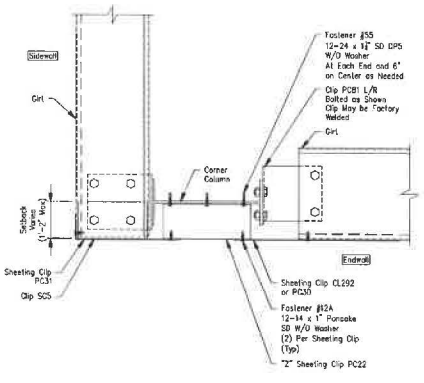

Note:
Zee Girt Shown
Cee Girt Similar

All Bolts To Be ⅜"ø Unless Noted.
For Required Length Refer To Grip
Table On Erection Drawings.

Welded Clips - Framed Opening Connections - Cold Form and Hot Rolled Cee - Three and Four Sided Openings

Page AC01220 | Date May '19 | Rev 02

Note:
All Horizontal Members within clear Opening are Clipped and attached to Jambs with ⅜"ø Fin Head Bolts.

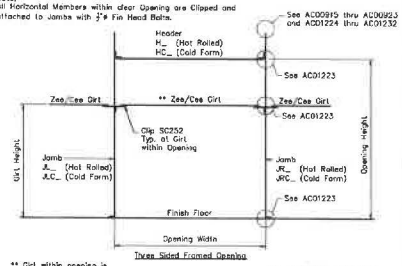

** Girt within opening is provided when Framed Opening is to be paneled over.

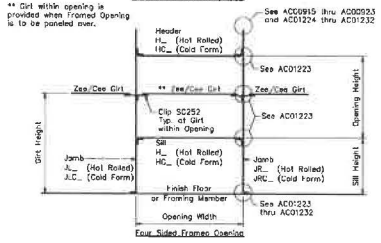

Welded Clips - Framed Opening Connections - Cold Form and Hot Rolled Base, Girt, Header, and Sill to Jamb

Page AC01223 | Date May '19 | Rev 02

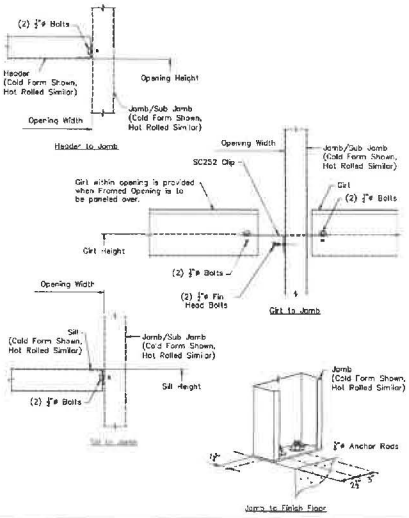

Welded Clips - Framed Opening Connections - Cold Form and Hot Rolled Jamb/Sub Jamb to Zee/Cee Girt or Header/Sill

Page AC01224 | Date May '19 | Rev 01

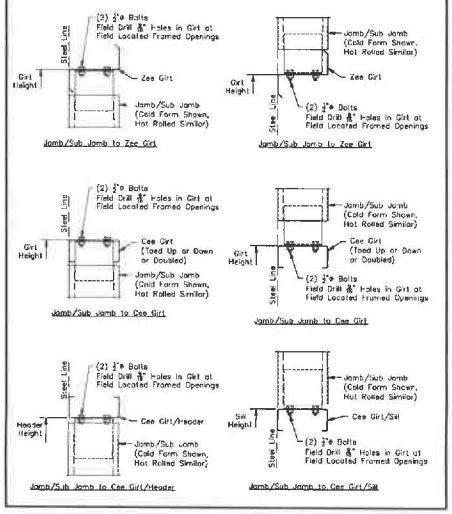

Single Skin Wall Panel Outside Closure Requirements at Eave

Page GD06002 | Date Jun '23 | Rev 03

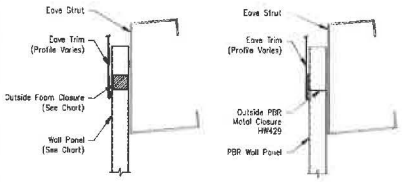

Detail at Foam Closure
(Low Eave Shown High Eave Similar)

Detail at Optional Metal Closure
For PBR Panel Only
(Low Eave Shown High Eave Similar)

Note:
Foam Closures Are Required When Job Requires Air Infiltration
Or Sealed Wall Requirements, See GD16002.

Wall Panel	Foam Closure
PBR	HW436
AVP	HW455
PBU	HW480
NuWall	HW424
PBC	HW462
PBD	HW463
ShadowRib	HW412
Designer Series (Fluted Only)	HW4037
RBR (Reverse Rolled PBR)	HW455
RBU (Reverse Rolled PBU)	HW459
7.2	HW481

Single Skin Wall Panel Outside Closure Requirements at Rake

Page GD06003 | Date Jun '23 | Rev 03

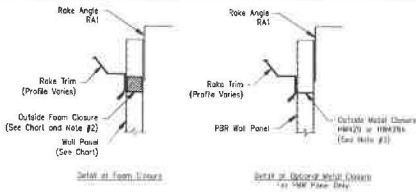

Detail at Foam Closure

Detail at Optional Metal Closure
For PBR Panel Only

Notes:
1. Outside Metal Closures are Required at all Sheeted Intersects
2. PBR Wall Panel Outside Foam Closures, HW456 Required for Roof Slope 4:12 or Less and HW421 for Roof Slope Greater Than 4:12. Field Form/Notch HW422 in Panel Ribs.
3. PBR Wall Panel Outside Metal Closure HW429 for Roof Slope 0:12 Thru 4:12 and HW436 for Roof Slope Greater Than 4:12 Thru 12:12.
4. Rake Side Trim Required for All Standing Seam Roofs and at Slope Down Roof Runs Greater Than 100'-0"
5. Foam Closures are Required when Job Requires Air Infiltration or Sealed Wall Requirements. See GD16002

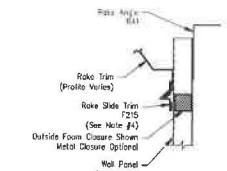

Detail at Rake Slide Trim

Wall Panel	Foam Closure
PBR	HW436/HW421
AVP	HW455
PBU	HW480
NuWall	HW424
PBC	HW462
PBD	HW463
ShadowRib	HW412
Designer Series (Fluted Only)	HW4037
RBR (Reverse Rolled PBR)	HW455
RBU (Reverse Rolled PBU)	HW459
7.2	HW481

Revision	Date	By	Description

CAPITAL STEEL INDUSTRIES, LLC
PO BOX 1311 ST. HWY 101 & 35th ST.
FLORENCE, OR 97439
PH 541-997-8406
FAX 503-972-2814
CCB #70466 OR #166420

Customer: CAPITAL STEEL INDUSTRIES LLC
10639 BRADFORD RD
LITTLETON, CO 80127-4208

Project Name & Location:
BULLDOG BARNS LLC
3120 HIGHWAY 101
FLORENCE, OR 97439-9508

Drawing Status:
☐ Issued For Approval (Not For Construction)
☐ Issued For Permit
☒ Issued For Construction

Scale: NOT TO SCALE
Drawn By: YMC 2/21/25
Checked By: CBC 2/25/25
Project Engineer: SDL
Job Number: 19-B-84746
Sheet Number: R6 of 13

The engineer whose seal appears hereon is employed by or is contracted to provide engineering services for the manufacturer, Cornerstone Building Brands or one of its affiliates, for the materials described herein. Said seal or certification is limited to the products designed and manufactured by manufacturer only. The undersigned engineer is not the overall engineer of record for this project.

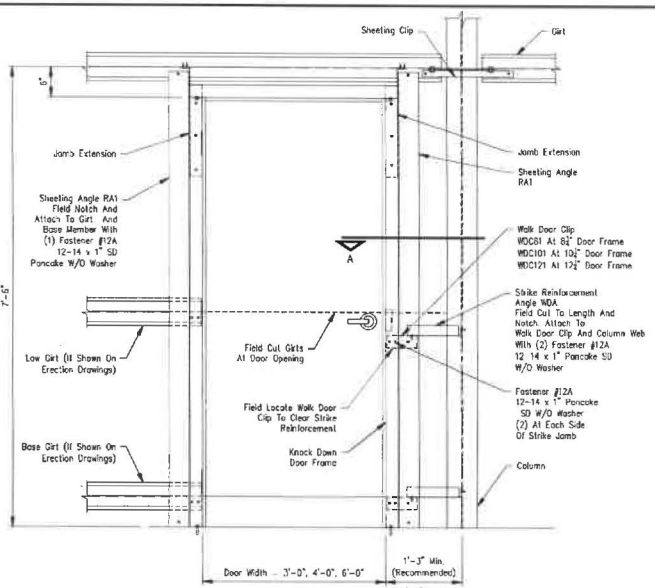

Door Elevation Without Jambs

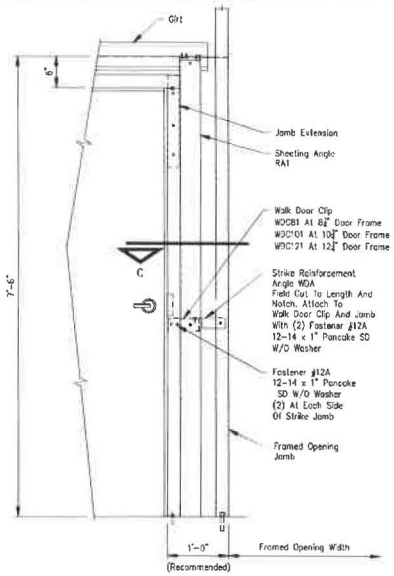

Door Elevation Without Jambs At Framed Opening Jamb

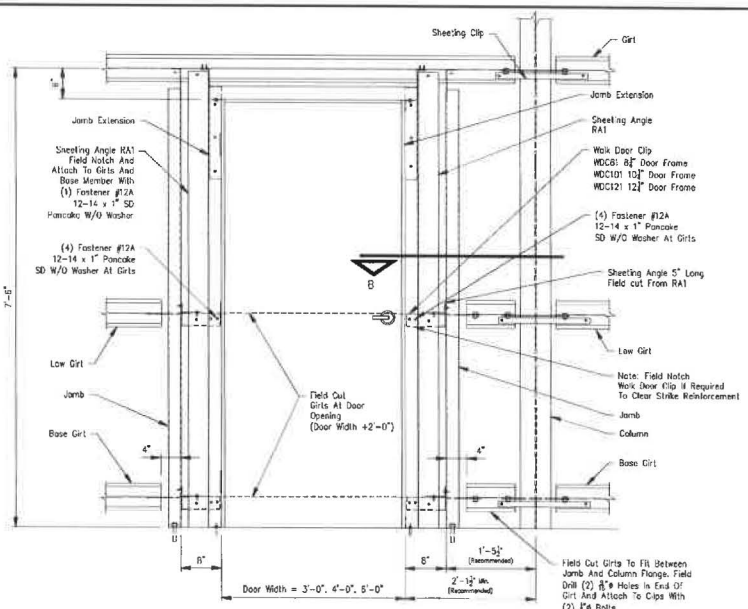

Door Elevation With Jambs

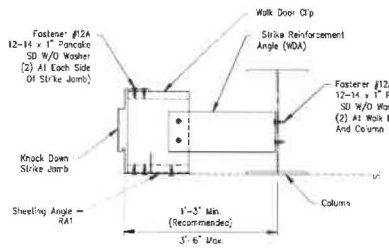

Section A Flush Framed Columns

Note:
Fasteners Attaching To Column Webs May Require Pre Drilling

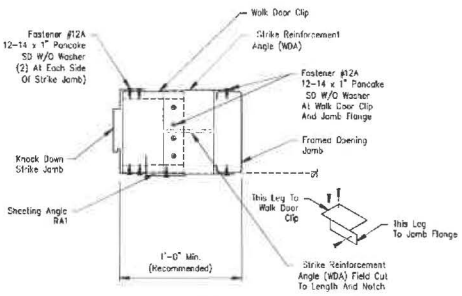

Section C Minimum Side Clearance At A Framed Opening Jamb

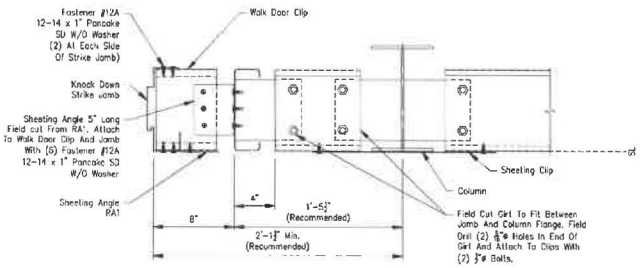

Section B Flush Framed Columns

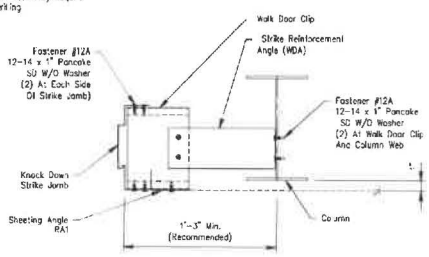

Section A 1" Inset Framed Columns

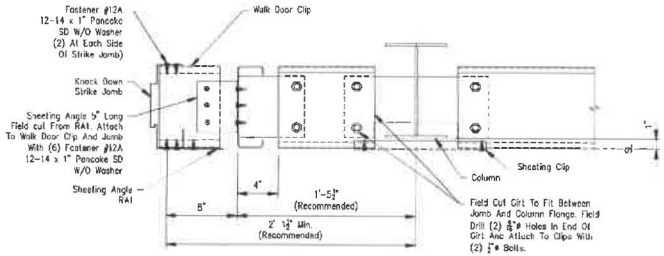

Section B 1" Inset Framed Columns

Revision	Date	Description	By	Ck'd

CAPITAL STEEL INDUSTRIES, LLC
570 Building, Suite 200
8321 S Sangre De Cristo Road
Pueblo, CO 81007
Phone: 800-248-1840
Fax: 800-872-5814

Customer: CAPITAL STEEL INDUSTRIES LLC
Project Name & Location: BULLDOG BARNS LLC
1375 CAMPBELL ROAD
LITTLETON, CO 80127 - 4208
FLORENCE, OR 97439-9508

Drawing Status:
☐ Issued For Approval (Not For Construction)
☐ Issued For Permit
☒ Issued For Construction

Scale: NOT TO SCALE
Drawn by: YMC 2/21/25
Checked by: CBC 2/25/25
Project Engineer: EOL
Job Number: 19-B-84746
Sheet Number: R7 of 13

The engineer whose seal appears hereon is employed by or is contracted to provide engineering services for the manufacturer, Cornerstone Building Brands or one of its affiliates, for the materials described herein. Said seal or certification is limited to the products designed and manufactured by manufacturer only. The undersigned engineer is not the overall engineer of record for this project.

Knock Down Doors - Side Clearances

Page	AC05209
Date	May '19
Rev	01

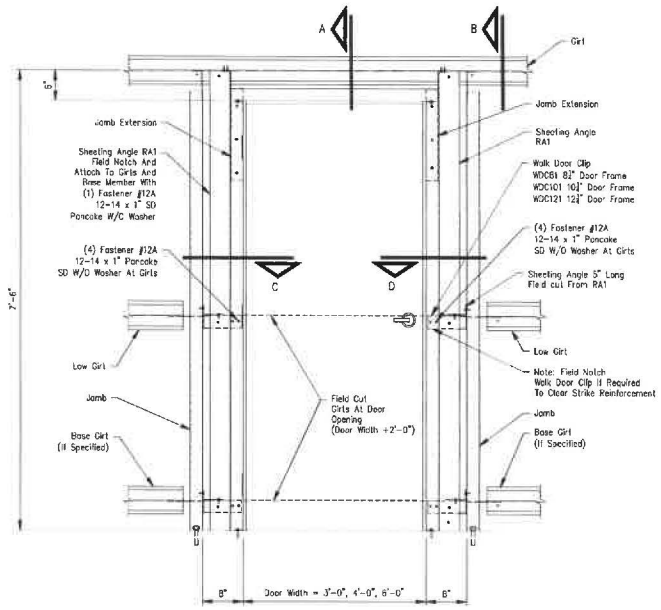

Door Elevation

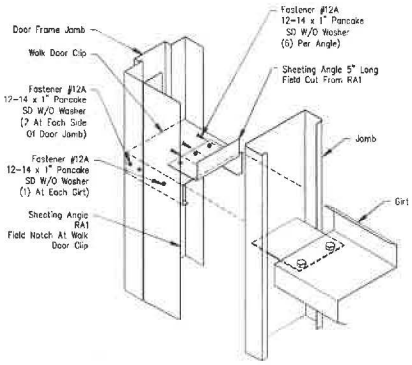

Walk Door Clip To Jamb Isometric

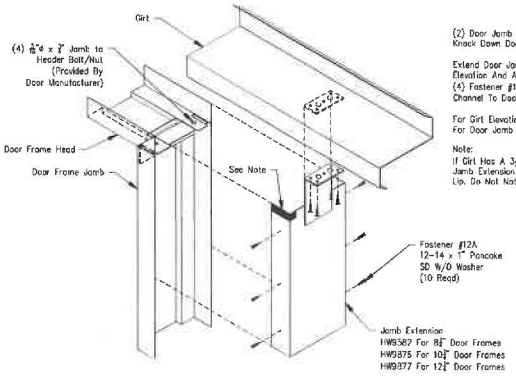

(2) Door Jamb Extensions Are Required For All Knock Down Doors.

Extend Door Jamb Extension To The 7'-6" Girt Elevation And Attach To The Web Of The Girt With (4) Fastener #12A, Attach Door Jamb Extension Channel To Door Jamb With (6) Fastener #12A.

For Girt Elevations Above 7'-6" Refer To AC05132 For Door Jamb Extension Requirements.

Note:
If Girt Has A 3/4" Flange, Field Notch Jamb Extension Channel To Clear Girt Lip. Do Not Notch Girt Lip.

Door Jamb Extension Isometric

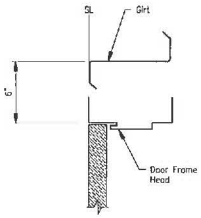

Section A

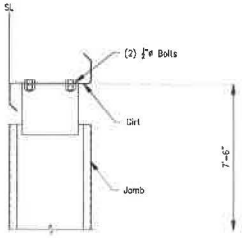

Section B

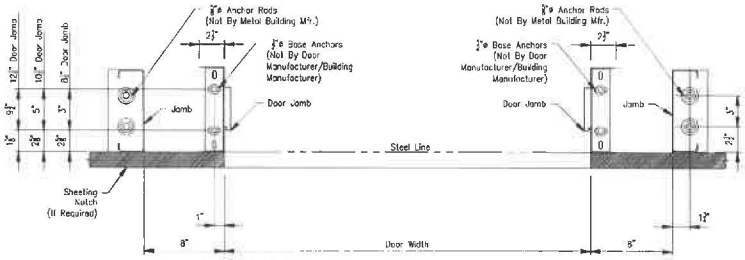

The Adequacy Of The 1/2"ø Base Anchor Is Not The Responsibility Of The Building Manufacturer. The Adequacy Of These Base Anchors Should Be Determined By A Qualified Foundation Engineer.

Verify Door Jamb Base Clip Dimensions With Patterns Shown Prior To Placement Of Door Anchors And Adjust Patterns If Needed.

Note:12" Frames May Not Have Kerf Door Frame Feature Depending On Door Manufacturer.

Knock Down Door Anchor Placement

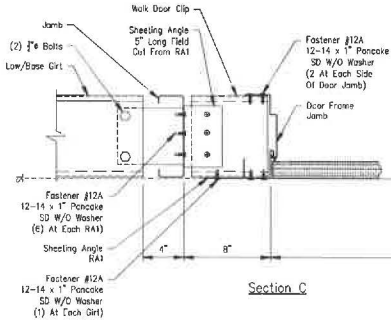

Section C

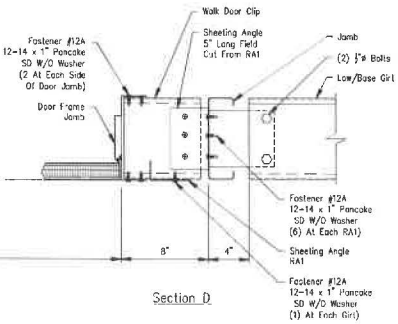

Section D

Revision	Date	Description	By	Ck'd

CAPITAL STEEL INDUSTRIES, LLC
C/O Building Services Group
8231 S. SANDRE DE CRISTO RD. SUITE 302
PHONE 800-248-9140
FAX 303-972-8614

Customer:
CAPITAL STEEL INDUSTRIES LLC
10539 BRADFORD RD
LITTLETON,CO 80127-4208

Project Name & Location:
BULLDOG BARNS LLC
3120 HIGHWAY 101
FLORENCE,OR 97439-9508

Drawing Status:
☐ Issued For Approval (Not For Construction)
☐ Issued For Permit
☒ Issued For Construction

Scale: NOT TO SCALE
Drawn by: YMC 2/21/25
Checked by: CBC 2/25/25
Project Engineer: EOL
Job Number: 19-B-84746
Sheet Number: R8 of 13

The engineer whose seal appears hereon is employed by or is contracted to provide engineering services for the manufacturer, Cornerstone Building Brands or one of its affiliates, for the materials described herein. Said seal or certification is limited to the products designed and manufactured by manufacturer only. The undersigned engineer is not the overall engineer of record for this project.

Knock Down Door - With Girt At 7'-6" And With Low / Base Girt
Walk Door Frame Attaching To Welded Clip Jambs

Page	Date	Rev
AC05220	Nov '18	00

PBR Wall Panel
Base Angle Without Panel Recess

Page PW02101 | Date Apr '18 | Rev 02

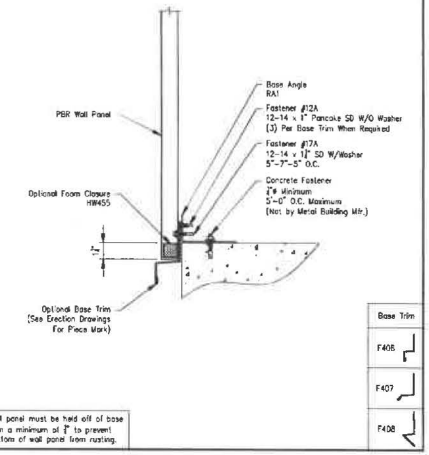

Wall panel must be held off of base trim a minimum of 1/2" to prevent bottom of wall panel from rusting.

PBR Wall Panel
Outside Corner - On Module

Page PW03001 | Date Apr '19 | Rev 08

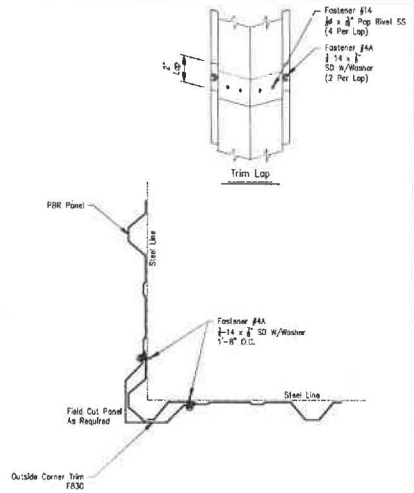

PBR Wall Panel
Panel Side Lap

Page PW05002 | Date Mar '19 | Rev 03

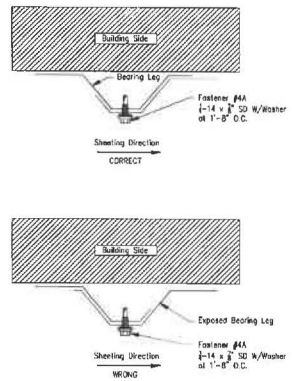

PBR Wall Panel
Fastener Location

Page PW05003 | Date Aug '15 | Rev 04

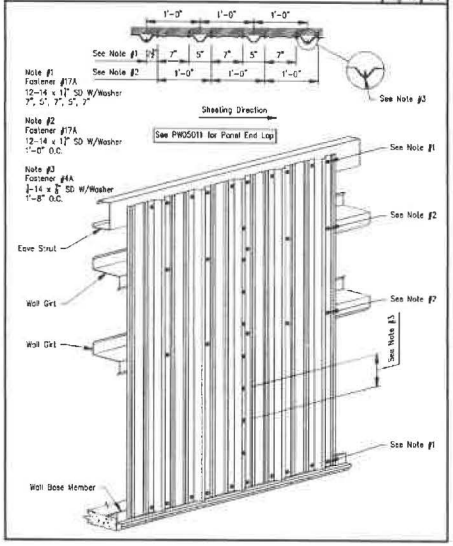

PBR Wall Panel - Three Sided Framed Opening - Trim Installation with Field Notch Panel at Head Trim

Page PW07022 | Date Mar '20 | Rev 05

Note: Trim Installation can be done by Field Notch Panel as shown on PW07022 & PW07023 OR with Field Notch and Bend Tabs at Head Trim as shown on PW07024 & PW07025.

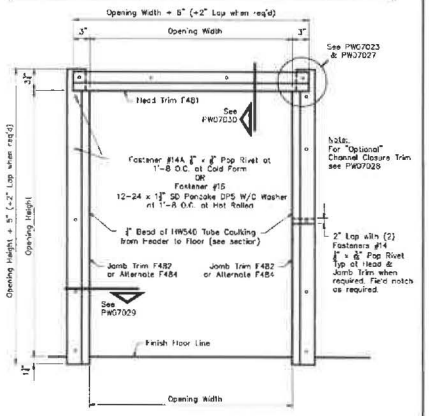

Note: All trim is to be installed BEFORE blanket insulation is applied to walls.

Note: Field measure Opening Width and adjust cut dimensions accordingly.

PBR Wall Panel - Three Sided Framed Opening
Field Notch Panel at Head Trim

Page PW07023 | Date Mar '20 | Rev 05

Note: Trim Installation can be done by Field Notch Panel as shown on PW07022 & PW07023 OR with Field Notch and Bend Tabs at Head Trim as shown on PW07024 & PW07025.

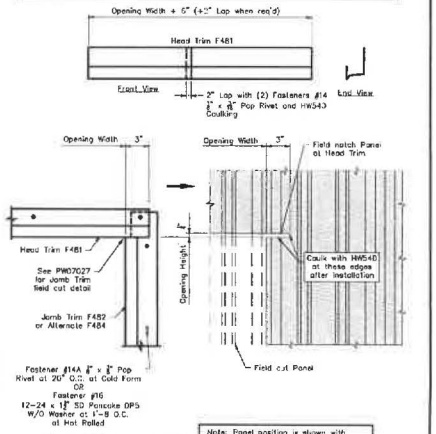

Note: All trim is to be installed BEFORE blanket insulation is applied to walls.

Note: Panel position is shown with Panel Rib and Opening on 1'-0 module. Location of Rib may vary depending on the Opening Width and location. Field measure before cutting Panel and Trim.

PBR Wall Panel - Three Sided Framed Opening - Trim Installation with Field Notch and Bend Tabs at Head Trim

Page PW07024 | Date Mar '20 | Rev 05

Note: Trim Installation can be done by Field Notch Panel as shown on PW07022 & PW07023 OR with Field Notch and Bend Tabs at Head Trim as shown on PW07024 & PW07025.

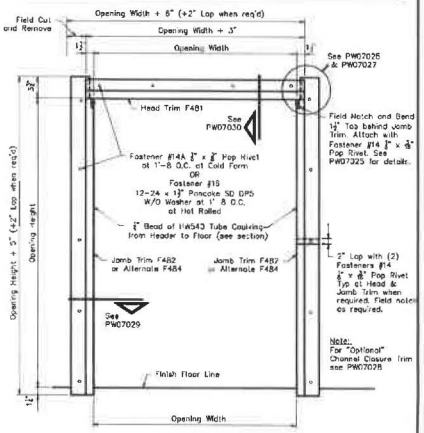

Note: All trim is to be installed BEFORE blanket insulation is applied to walls.

Note: Field measure Opening Width and Height before making field cuts and adjust cut dimensions accordingly.

PBR Wall Panel - Three Sided Framed Opening - Field Notch and Bend Tabs at Head Trim

Page PW07025 | Date Mar '20 | Rev 05

Note: Trim Installation can be done by Field Notch Panel as shown on PW07022 & PW07023 OR with Field Notch and Bend Tabs at Head Trim as shown on PW07024 & PW07025.

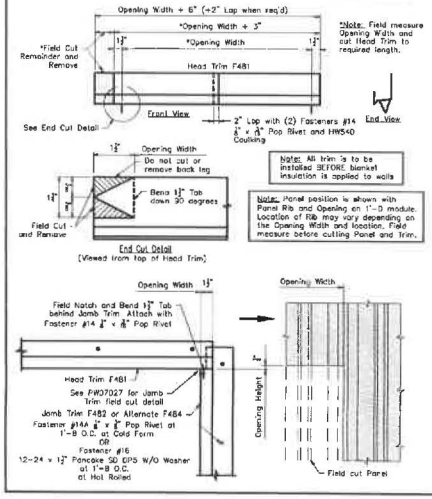

Revision	Date	Description	By	Ck'd

CAPITAL STEEL INDUSTRIES, L.L.C.
CYE BUILDING SERVICES GROUP
5331 S. SANDERS RD. SUITE 302
LITTLETON, CO 80123
PHONE: 800-248-8840
FAX: 303-972-9614

Customer: CAPITAL STEEL INDUSTRIES LLC
1120 E. ARCHWAY RD.
LITTLETON, CO 80122-4208

Project Name & Location:
BULLDOG BARNS LLC
3120 ARCHWAY RD
LITTLETON, CO 80122-4208

Drawing Status:
☐ Issued For Approval (Not For Construction)
☐ Issued For Permit
☒ Issued For Construction

Scale: NOT TO SCALE
Drawn by: YMC 2/21/25
Checked by: CBC 2/25/25
Project Engineer: EOL
Job Number: 19-B-84746
Sheet Number: R9 of 13

The engineer whose seal appears hereon is employed by or is contracted to provide engineering services for the manufacturer, Cornerstone Building Brands or one of its affiliates, for the materials described herein. Said seal or certification is limited to the products designed and manufactured by manufacturer only. The undersigned engineer is not the overall engineer of record for this project.

PBR Wall Panel - Three Sided Framed Opening Jamb Trim Field Cut Details

Page PW07027 | Date Mar '20 | Rev 04

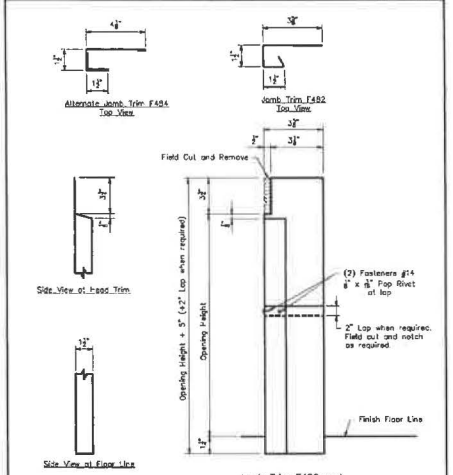

Note: Field measure Opening Height before making field cuts and adjust cut dimensions accordingly.

PBR Wall Panel - Three Sided Framed Opening "Optional" Channel Closure Trim

Page PW07028 | Date May '19 | Rev 04

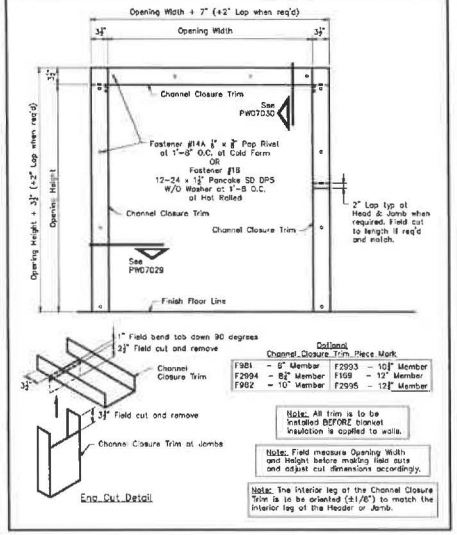

Optional Channel Closure Trim Piece Mark

F981	- 6" Member	F2993	- 10 1/2" Member
F2994	- 8 1/2" Member	F169	- 12" Member
F992	- 10" Member	F2995	- 12 1/2" Member

Note: All trim is to be installed BEFORE blanket insulation is applied to walls.

Note: Field measure Opening Width and Height before making field cuts and adjust cut dimensions accordingly.

Note: The interior leg of the Channel Closure Trim is to be oriented (61/8") to match the interior leg of the Header or Jamb.

PBR Wall Panel - Three Sided Framed Opening - Jamb Trim Installation

Page PW07029 | Date Mar '20 | Rev 05

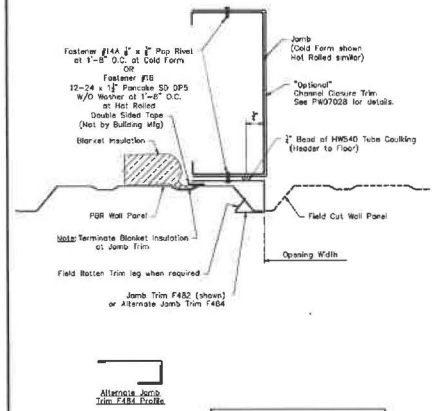

Note: All trim is to be installed BEFORE blanket insulation is applied to walls.

Note: Panel position is shown with Panel Rib and Opening on 1'-0" module. Location of Rib may vary depending on the Opening Width and location. Field measure before cutting Panel and Trim.

PBR Wall Panel - Three Sided Framed Opening Head Trim Installation

Page PW07030 | Date Oct '19 | Rev 03

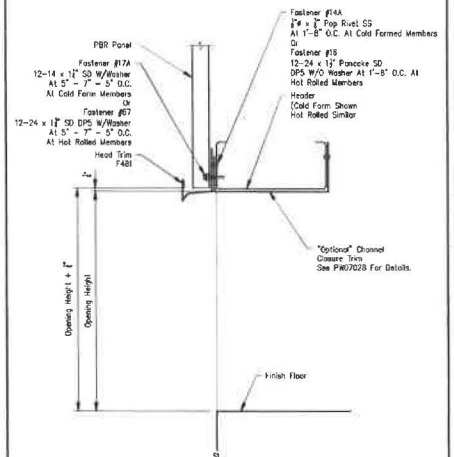

PBR Roof Panel Fastener And Tape Sealant Location

Page GPR00011 | Date Apr '19 | Rev 01

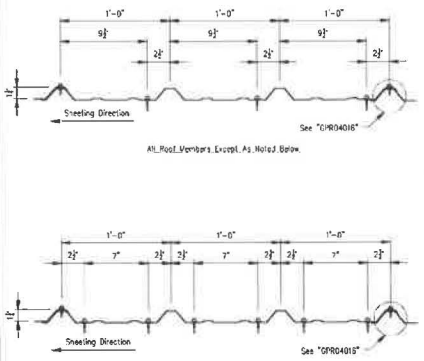

Note: Screw patterns shown satisfy U.L. 90 requirements for roof

PBR Roof Panel Side Lap And End Lap Details

Page GPR04016 | Date Apr '19 | Rev 04

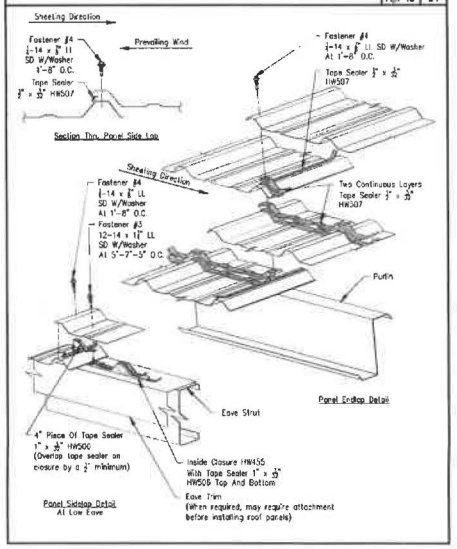

PBR Roof Panel Peak Box At Fixed Ridge

Page GPR05001 | Date Jun '21 | Rev 06

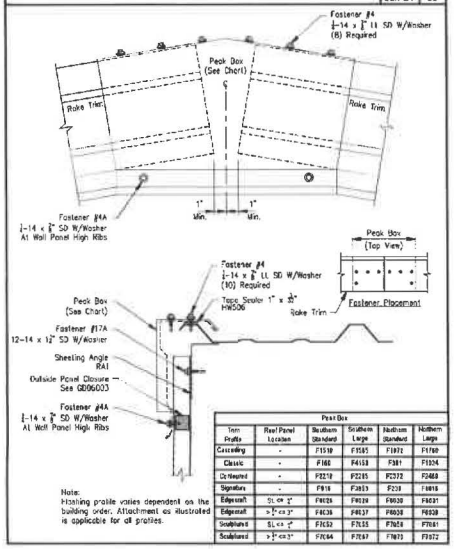

Note: Flashing profile varies dependent on the building order. Attachment as illustrated is applicable for all profiles.

Peak Box

Trim Profile	Roof Panel Location	Southern Standard	Southern Large	Northern Standard	Northern Large
Cascading	-	F1518	F1515	F1871	F1760
Classic	-	F166	F4153	F381	F1304
Octagonal	-	F2218	F2215	F2372	F2468
Signature	-	F816	F3813	F239	F1816
Edgecraft	SL <= 3"	F4035	F4039	F4030	F4031
Edgecraft	> 3" <= 3"	F4036	F4037	F4038	F4039
Sculptured	SL <= 2"	F7652	F7655	F7654	F7651
Sculptured	> 3" <= 3"	F7644	F7647	F7673	F7672

PBR Roof Panel Fixed Ridge Detail

Page GPR06003 | Date Apr '19 | Rev 04

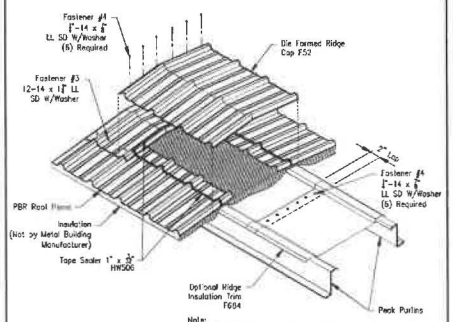

Note: Install optional ridge insulation trim F684 as insulation and roof sheeting is being applied. Temporary attachment, if required, is not by metal building manufacturer.

Revision	Date	Description	By	Ck'd

CAPITAL STEEL INDUSTRIES, LLC
C/O Building Services Group 5333 S. Zuni St. Suite 302
Littleton, CO 80120
Phone: 303-922-8240
Fax: 303-922-2814

Customer: CAPITAL STEEL INDUSTRIES LLC
10639 BRADFORD RD
LITTLETON, CO 80127-4208

Project Name & Location: BUILDING BARNS LLC
3120 HIGHWAY 10
FLORENCE, OR 97439-9508

Drawing Status: ☐ Issued For Approval (Not For Construction) ☐ Issued For Permit ☒ Issued For Construction

Scale: NOT TO SCALE
Drawn by: YMC 2/21/25
Checked by: CBC 2/25/25
Project Engineer: EOL
Job Number: 19-B-84746
Sheet Number: R10 of 13

The engineer whose seal appears hereon is employed by or is contracted to provide engineering services for the manufacturer. Cornerstone Building Brands or one of its affiliates, for the materials described herein. Said seal or certification is limited to the products designed and manufactured by manufacturer only. The undersigned engineer is not the overall engineer of record for this project.

PBR Roof Panel
Section Thru Fixed Ridge

Page GPR06004 | Date Apr '19 | Rev 04

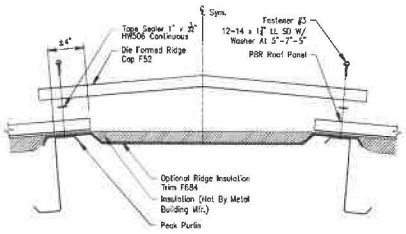

PBR Roof Panel - Edgecraft Eave Box Trim
Sheeted Wall

Page TPR03001 | Date Mar '21 | Rev 01

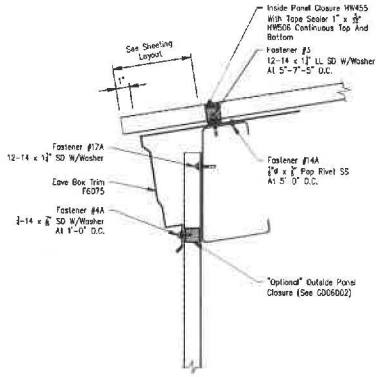

PBR Roof Panel - Northern Standard And Northern Large Edgecraft
Low Eave Rake Corner With Eave Box Trim - ⅜" Thru 1⅜" Wall Panel

Page TPR04019 | Date Jul '21 | Rev 01

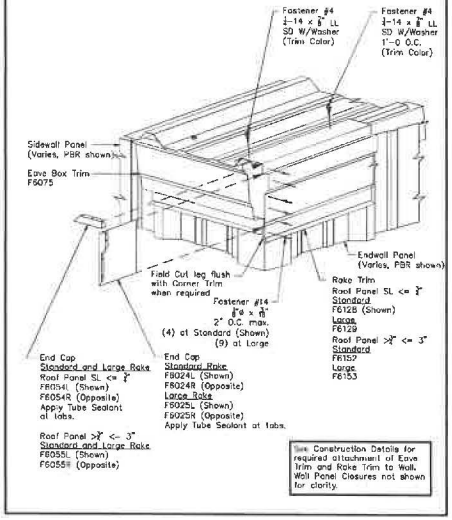

See Construction Details for required attachment of Eave Trim and Rake Trim to Wall. Wall Panel Closures not shown for clarity.

PBR Roof Panel - Northern Standard And Northern Large
Edgecraft Rake Trim - Sheeted Wall

Page TPR05008 | Date Jul '20 | Rev 00

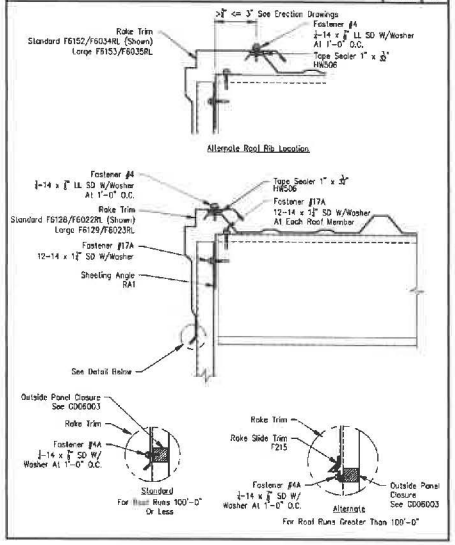

PBR Wall Panel - Walk Door & Glass-Front Walk Door - Trim Installation
with Field Notch Panel at Head Trim

Page PW09022 | Date Mar '20 | Rev 03

Note: Trim installation can be done by Field Notch Panel as shown on PW09022 & PW09023 OR with Field Notch and Bend Tabs at Head Trim as shown on PW09024 & PW09025.

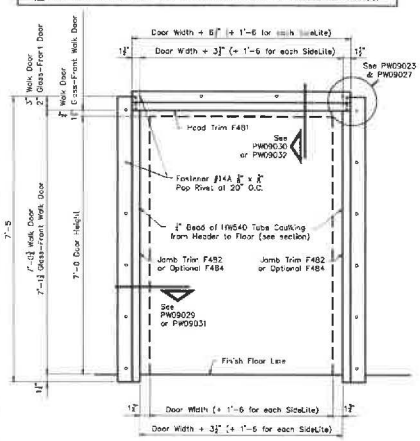

Note: All trim is to be installed BEFORE blanket insulation is applied to walls.

Note: Field measure Door Width and Height before making field cuts and adjust cut dimensions accordingly.

PBR Wall Panel - Walk Door And Glass-Front Walk Door
Field Notch Panel at Head Trim

Page PW09023 | Date Mar '20 | Rev 02

Note: Trim installation can be done by Field Notch Panel as shown on PW09022 & PW09023 OR with Field Notch and Bend Tabs at Head Trim as shown on PW09024 & PW09025.

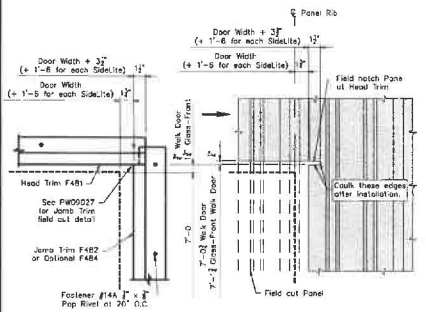

Note: All trim is to be installed BEFORE blanket insulation is applied to walls.

Note: Panel position is shown with Panel Rib and Door on 1'-0 module. Location of Rib may vary depending on the Door Width and location. Field measure before cutting Panel and Trim.

PBR Wall Panel - Walk Door & Glass-Front Walk Door - Trim Installation
with Field Notch and Bend Tabs at Head Trim

Page PW09024 | Date Mar '20 | Rev 03

Note: Trim installation can be done by Field Notch Panel as shown on PW09022 & PW09023 OR with Field Notch and Bend Tabs at Head Trim as shown on PW09024 & PW09025.

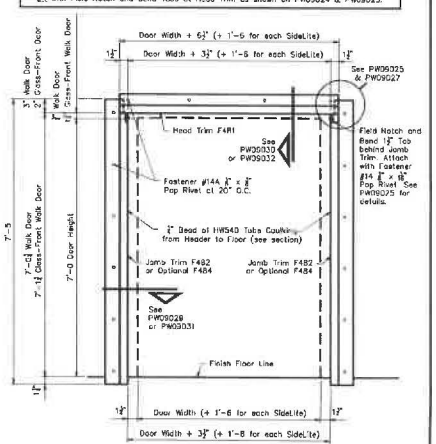

Note: All trim is to be installed BEFORE blanket insulation is applied to walls.

Note: Field measure Door Width and Height before making field cuts and adjust cut dimensions accordingly.

PBR Wall Panel - Walk Door And Glass-Front Walk Door - Field Notch and Bend Tabs at Head Trim

Page PW09025 | Date Mar '20 | Rev 02

Note: Trim installation can be done by Field Notch Panel as shown on PW09022 & PW09023 OR with Field Notch and Bend Tabs at Head Trim as shown on PW09024 & PW09025.

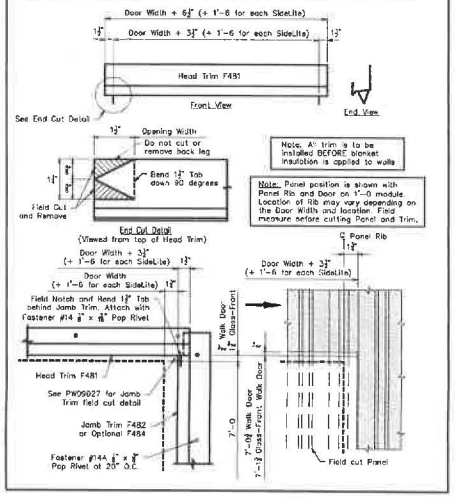

Note: All trim is to be installed BEFORE blanket insulation is applied to walls.

Note: Panel position is shown with Panel Rib and Door on 1'-0 module. Location of Rib may vary depending on the Door Width and location. Field measure before cutting Panel and Trim.

Revision	Date	Description	By	Ck'd

CAPITAL STEEL INDUSTRIES, LLC
Manufacturer of Steel Buildings
1215 S. Sheridan St. Cheyenne, WY 82001
Phone: 307-637-7480
Fax: 307-637-7484

Customer: CAPITAL STEEL INDUSTRIES LLC
10519 BRAMFORD RD
LITTLETON, CO 80127-4206

Project Name & Location: CSI PROJECT
9101 HIGHWAY 101
FLORENCE, OR 97439-9503

Drawing Status: ☐ Issued For Approval (Not For Construction) ☐ Issued For Permit ☒ Issued For Construction

Scale: NOT TO SCALE
Drawn by: YMC 2/21/25
Checked by: CBC 2/25/25
Project Engineer: EOL
Job Number: 19-B-84746
Sheet Number: R11 of 13

The engineer whose seal appears hereon is employed by or is contracted to provide engineering services for the manufacturer, Conversions Building Brands or one of its affiliates, for the materials described herein. Said seal or certification is limited to the products designed and manufactured by manufacturer only. The undersigned engineer is not the overall engineer of record for this project.

PBR Wall Panel - Walk Door And Glass-Front Walk Door Jamb Trim Field Cut Details

Page PW09027 | Date Mar '20 | Rev 03

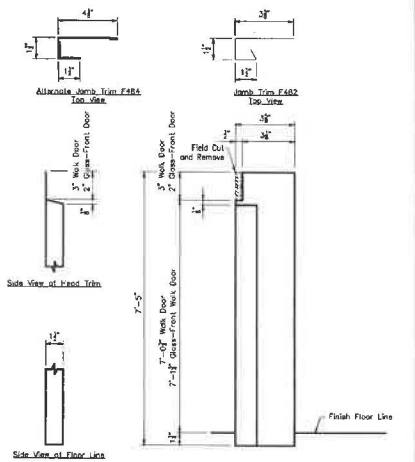

Note: Field measure Door Height before making field cuts and adjust cut dimensions accordingly so that Jamb Trim fits to Head Trim & at 1" below Finish Floor Line.

Jamb Trim F482 and Alternate Jamb Trim F484
Front View
Right Jamb Trim as shown
Left Jamb Trim opposite hand

PBR Wall Panel - Knock Down Door Jamb Trim Installation

Page PW09031 | Date Mar '20 | Rev 07

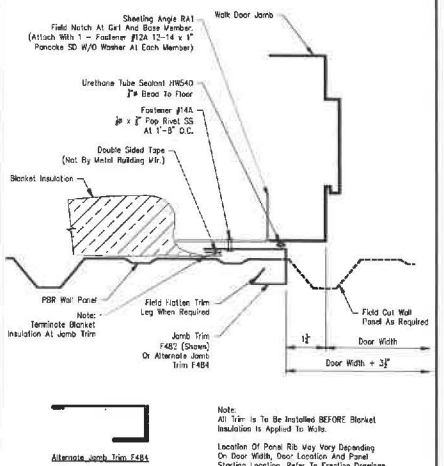

Alternate Jamb Trim F484

Note:
All Trim is To Be Installed BEFORE Blanket Insulation Is Applied To Walls.

Location Of Panel Rib May Vary Depending On Door Width, Door Location And Panel Starting Location. Refer To Erection Drawings For Panel Layout. Field Measure Before Cutting Panel And Trim.

PBR Wall Panel - Knock Down Walk Door - Head Trim Installation

Page PW09032 | Date May '19 | Rev 03

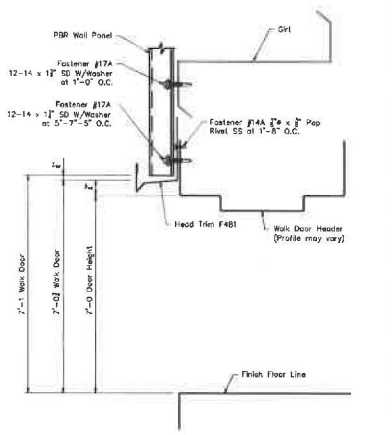

Note: All trim is to be installed BEFORE blanket insulation is applied to walls.

PBR Roof Panel - Perimeter Trim Fastener and Sealant Reference

Page GPR00008 | Date May '19 | Rev 01

TRANSVERSE EXPAN.	VALLEY FLASHING		CONTINUOUS CLIP	HIP FLASHING
F330	F711		F283 / F284	F71
34" Tube Sealant (6) Fastener #4 ¼-14 x ¾" LL SD W/ Washer per Lap Trim Color	(2) Fastener #12A 12-14 x 1" P.H. SD 34" Sealant/Lap 24" Tape Sealant per Foot		Fastener #4 ¼-14 x ¾" LL SD W/ Washer at 12" O.C. Trim Color	Fastener #4 ¼-14 x ¾" LL SD W/ Washer at 8" O.C. & (8) per Lap Trim Color 35" Tube Sealant
Canopy-Low Soffit	Canopy-2"x1½" Soffit	Canopy-Hi Soffit	Canopy-2"x1½" Soffit	Flush Canopy
Low 8½" Eave	Low 8½" Eave	Low 10" Eave	Low 10" Eave	Low Eave Trim
F2957	F2956,F2956,F2960	F2961	F2962,F2963,F2964	F2955
12" Tube Sealant (7) Fastener #14 ¼" x 4" Pop Rivet per Lap Fastener #17A 12-14 x 1¾" SD W/ Washer 24" O.C. Top & 12" O.C. Bottom Trim Color	12" Tube Sealant (7) Fastener #14 ¼" x 4" Pop Rivet per Lap Fastener #12A 12-14 x 1¾" SD W/ Washer 24"O.C. Fastener #14 12" O.C. Trim Color	12" Tube Sealant (7) Fastener #14 ¼" x 4" Pop Rivet per Lap Fastener #17A 12-14 x 1¾" SD W/ Washer 24" O.C. Top & 12" O.C. Bottom Trim Color	12" Tube Sealant (7) Fastener #14 ¼" x 4" Pop Rivet per Lap Fastener #17A 12-14 x 1¾" SD W/ Washer 24"O.C. Fastener #14 12" O.C. Trim Color	9" Tube Sealant (2) Fastener #14 ¼" x 4" Pop Rivet per Lap Fastener #14 36" O.C W/O Closure Fastener #14A ⅜" x ⅜" Pop Rivet 12" O.C. W/ Closure Trim Color
Canopy-Hi Soffit	Canopy-2"x1½" Soffit	Canopy-Hi Soffit	Canopy-2"x1½" Soffit	Flush Canopy
High 8½" Eave	High 8½" Eave	High 10" Eave	High 10" Eave	Floating Eave Trim
F2965	F2966,F2967,F2968	F2969	F2970,F2971,F2972	F2952
11" Tube Sealant (7) Fastener #14 ¼" x 4" Pop Rivet per Lap Fastener #17A 12-14 x 1¾" SD W/ Washer 24" O.C. Top & 12" O.C. Bottom Trim Color	11" Tube Sealant (7) Fastener #14 ¼" x 4" Pop Rivet per Lap Fastener #12A 12-14 x 1¾" SD W/ Washer 24"O.C. Fastener #14 12" O.C. Trim Color	11" Tube Sealant (7) Fastener #14 ¼" x 4" Pop Rivet per Lap Fastener #17A 12-14 x 1¾" SD W/ Washer 24" O.C. Top & 12" O.C. Bottom Trim Color	11" Tube Sealant (7) Fastener #14 ¼" x 4" Pop Rivet per Lap Fastener #17A 12-14 x 1¾" SD W/ Washer 24"O.C. Trim Color	9" Tube Sealant Fastener #14 ¼-14 x ¾" SD W/ Washer 12" O.C. (2) Fastener #14 ¼" x 4" Pop Rivet per 2" Lap Trim Color

PBR Roof Perimeter Trim Reference Trim Fastener and Sealants

Page TPR00006 | Date May '22 | Rev 01

EAVE BOX	EAVE BOX LAP	Eave Box End Cap	Closure Vertical Ridge	Metal Closure
F6075	2" LAP	F6076RL	HW4040	HW4041
Fastener #14A 5"-0" O.C. Fastener #4A ¼-14 x ¾" SD W/Washer 1'-0" O.C Trim Color	(1) Fastener #14 2'-0" Tube Sealant	(2) Fastener #14 1'-0" Tube Sealant	(1) Fastener #3 12-14 x 1¾" LL SD W/Washer (2) Fastener #4 ¼-14 x ¾" LL SD W/Washer Roof Color 2'-4" Tape Mastic	(3) Fastener #3 12-14 x 1¾" LL SD W/Washer (3) Fastener #4 ¼-14 x ¾" LL SD W/Washer Roof Color 2'-4" Tape Mastic
Expansion Ridge Trim	Ridge Closure	Flat Eave Trim	Inside Closure	Outside Closure
F675	F678	F2955	HW496	HW455
Fastener #4 ¼-14 x ¾" LL SD W/Washer 2 runs at 6" O.C. (16) Fastener #4 ¼-14 x ¾" LL SD W/Washer per Trim Color 5'-8" Tube Sealant	4'-0" Tube Sealing (11) Fastener #4 ¼-14 x ¾" LL SD W/Washer Trim Color	8" Tube Sealant (2) #14 per lap #14 3'-0" O.C w/Foil stamp #14A 1'-0" O.C. w/closure Trim Color		
Parapet Rake Trim	Rake Slide Trim	Ridge Cap	Parapet High Side	Sheeting Angle Longitudinal Ridge
F852	F215	F53	F326	RA66
2'-3" Tube Sealant (3) Fastener #4 ¼-14 x ¾" LL SD W/Washer Trim Color	Fastener #14 ¼-14 x ¾" SD W/Washer 1'-0" O.C. Trim Color	10'-1" Tape Mastic (12) Fastener #3 12-14 x 1¾" LL SD W/Washer (6) Fastener #4 ¼-14 x ¾" LL SD W/Washer Panel Color	5'-9" Tube Sealant (2) Fastener #14 ¼" (5) Fastener #4 ¼-14 x ¾" LL SD W/Washer per Lap Fastener #4 ¼-14 x ¾" LL SD W/Washer 1'-0" O.C. Trim Color	20'-0" Long

Fasteners

Page G000004 | Date Jul '17 | Rev 05

Fastener #14	Fastener #14A	Fastener #24
1/8" x 3/16" Pop Rivet Stainless Steel	1/8" x 3/8" Pop Rivet Stainless Steel	8 x 5/8" Ribbed Drilled
Fastener #43J	Fastener #43L	Fastener #44L
#14 x 1 1/8" O.D. Bonded Washer	L.T.P. Member Screw (Long Life) 1/4"-14 x 1 1/4" 5/16" Hex Washer Head W/ 1 1/8" O.D. Washer	L.T.P. Stitch Screw (Long Life) 1/4" 14 x 7/8" 5/16" Hex Washer Head W/ 1 1/8" O.D. Washer
Fastener #226	Fastener #228	Fastener #271
3/16" x 9/16" Closed End Rivet	10 x 1/2" Grommet Washer	8-16 x 1/2" Trim Screw
Fastener HW399		
#6 x 1" Rubber Grommet 7/8" Hex Head w/ Washer		

Note:
Refer to bill of materials for specific job requirements.

Tape Sealer And Tube Sealant

Page G000005 | Date Feb '24 | Rev 07

TRI-BEAD TAPE SM63A 1/8" X 1" X 25'-0"	FLAT TAPE SEALER HW507 3/32" X 1" X 50'-0"	TAPE SEALER - SWAGED HW515 1/8" X 2½" X 6" 6" Bottenlock HS SuperLock
TRIPLE BEAD TAPE SEALER HW502 1/8" X 2½" X 20'-0"	FLAT TAPE SEALER HW506 3/32" X 1" X 45'-0"	
URETHANE TUBE SEALANT HW540 (White) HW541 (Gray) HW542 (Bronze) Note: 25'-0" per Tube at 1/4" Bead	TAPE SEALER MINOR RIB HW512 3/32" X 1½" X 4" 4"	NON-SKINNING BUTYL TUBE (VAPOR SEALANT) IMP7100 (WHITE) 12' 6" per Tube at 3/8" Bead HW549 (WHITE) 25'-0" per Tube at 1/4" Bead
DEKSTRIP 7" WIDE = HW5227 DEKSTRIP 9" WIDE = HW5228 DEKSTRIP 12" WIDE = HW5229 DEKSTRIP 18" WIDE = HW5226 COLOR = Gray SCREWS 2" O.C. MAX. PERIMETER TAPE SEALER BOTH SIDES URETHANE TUBE SEALANT HW540 EACH END TERMINATION STRIP HW5335 EACH END (1" Wide x 4'-0" Long Alum.)	2" WIDE X 24 GA. STRAPPING • FL471 - 100'-0" Roll Galvalume Plus Only • FL569 - 500'-0" Roll Galvalume Plus or White Wash Coat	FLEXIBLE MEMBRANE (EPDM) 16" or 24" • HW520 - 16" x 50'-0" Roll • HW521 - 24" x 50'-0" Roll

NOTE:
Refer to bill of materials for specific job requirements

PBR, PBU, AVP, RBR And RBU Panel Fasteners

Page G000006 | Date Jun '23 | Rev 10

Wall Fasteners	Roof Fasteners Long Life (Optional at Wall)	
Member Screw Fastener #17A 12-14 x 1¾" ⅜" Hex Washer Head w/washer	Member Screw Fastener #3 12-14 x 1¾" ⅜" Hex Washer Head w/washer	
Member Screw Optional Fastener #17B 12-14 x 1¾" ⅜" Hex Washer Head w/washer	Member Screw Optional Fastener #3A 12-14 x 1¾" ⅜" Hex Washer Head w/washer	
Member Screw Optional Fastener #2B 12-14 x 2" ⅜" Hex Washer Head w/washer	Member Screw Optional Fastener #5B 12-14 x 2" ⅜" Hex Washer Head w/washer	
Stitch Screw Fastener #4A ¼-14 x ¾" ⅜" Hex Washer Head w/washer	Stitch Screw Fastener #4 ¼-14 x ¾" ⅜" Hex Washer Head w/washer	

NOTE: Refer to bill of materials for specific job requirements

Revision	Date	Description	By	Ck'd

CAPITAL STEEL INDUSTRIES, LLC
C/O Building Services Group
3820 S. SANGER RD, BOYD RD. SUITE 302
LITTLETON, CO 80120
PH. 303-912-2614
FAX. 303-912-2614

Customer: CAPITAL STEEL INDUSTRIES LLC
10839 BRADFORD RD
LITTLETON,CO 80127-4208

Project Name & Location:
BUILDING BARNS LLC
3120 HIGHWAY 101
FLORENCE,OR 97439-9508

Drawing Status:
☐ Issued For Approval
☐ Issued For Construction
☐ Issued For Permit
☒ Issued For Construction

Scale: NOT TO SCALE
Drawn by: YMC 2/21/25
Checked by: CBC 2/25/25
Project Engineer: EOL
Job Number: 19-B-84746
Sheet Number: R12 of 13

The engineer whose seal appears hereon is employed by or is contracted to provide engineering services for the manufacturer, Cornerstone Building Brands or one of its affiliates, for the materials described herein. Said seal or certification is limited to the products designed and manufactured by manufacturer only. The undersigned engineer is not the overall engineer of record for this project.