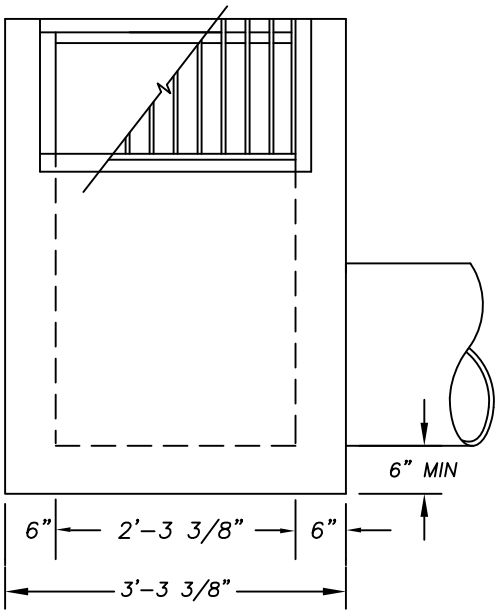

SECTION B – B

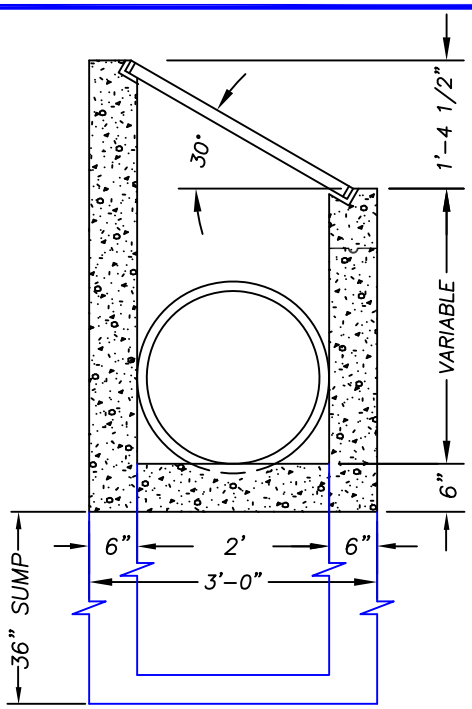

SECTION A – A

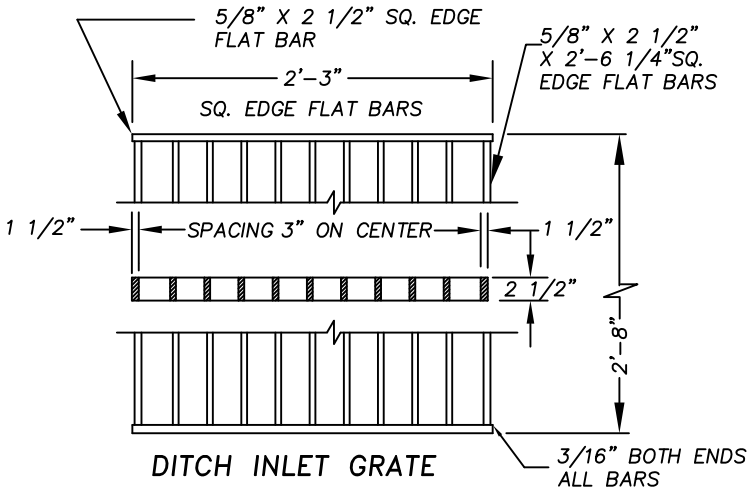

DITCH INLET GRATE

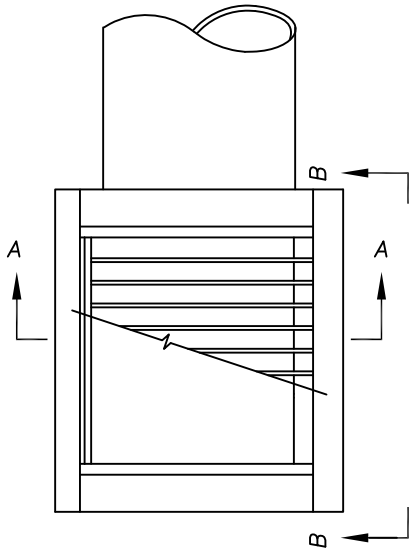

PLAN

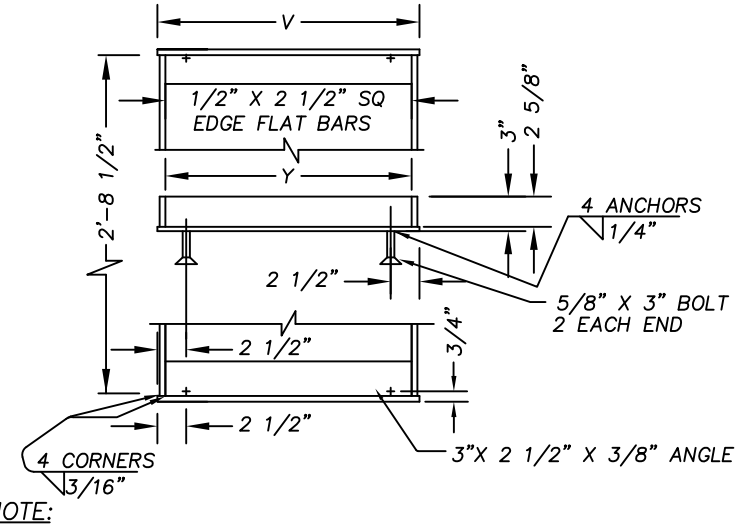

NOTE:

3/8" CROSS BARS SHALL BE FLUSH WITH THE GRATE SURFACE AND MAY BE FILLET WELDED, RESISTANCE WELDED OR ELECTROFORGED TO BEARING BARS.

DITCH INLET FRAME

NOTES:

1. CONCRETE STRENGTH SHALL BE 3000 PSI.
2. G-2 GRATES MAY BE USED IF APPROVED BY THE ENGINEER.
3. CATCH BASIN, FRAME, AND GRATES SHALL MEET H20 LOADING.
4. INSIDE FRAME DIMENSIONS: 2'-3 3/8", 2'-8 1/2."

INLET TYPE	V	Y	Y_1	NO. OF BARS	TYPE
D	2'-4 3/4"	2'-3 3/8"	2'-3"	9	1

CITY OF FLORENCE STANDARD DRAWING

DITCH INLET

DATE: REV. 10-26-12

DRAWING NO. F-306a

FILENAME: F-306a.DWG